Technical data
Hydraulic lift crane

LR 1160
Litronic®

Complies with ANSI B 30.5

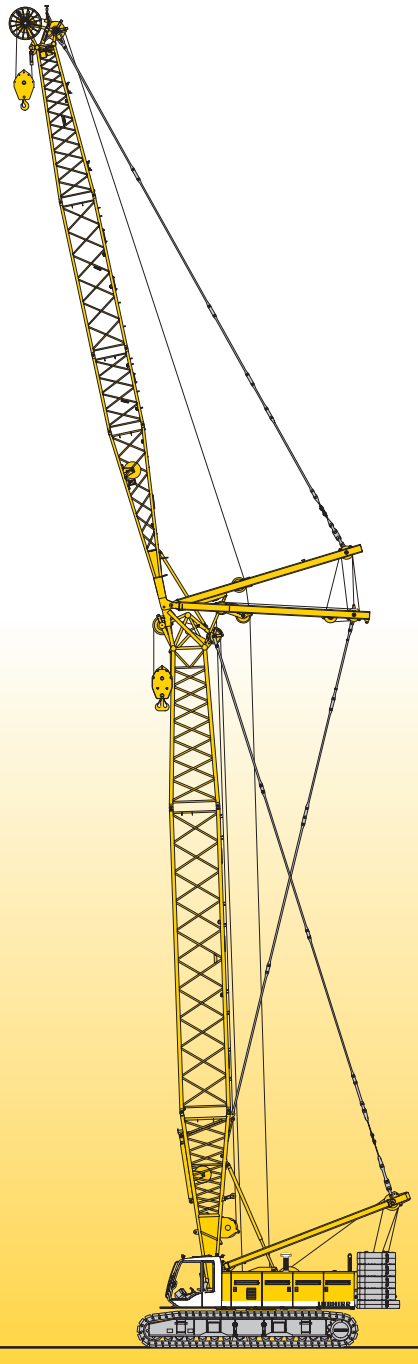

LIEBHERR

Dimensions

Basic machine with undercarriage

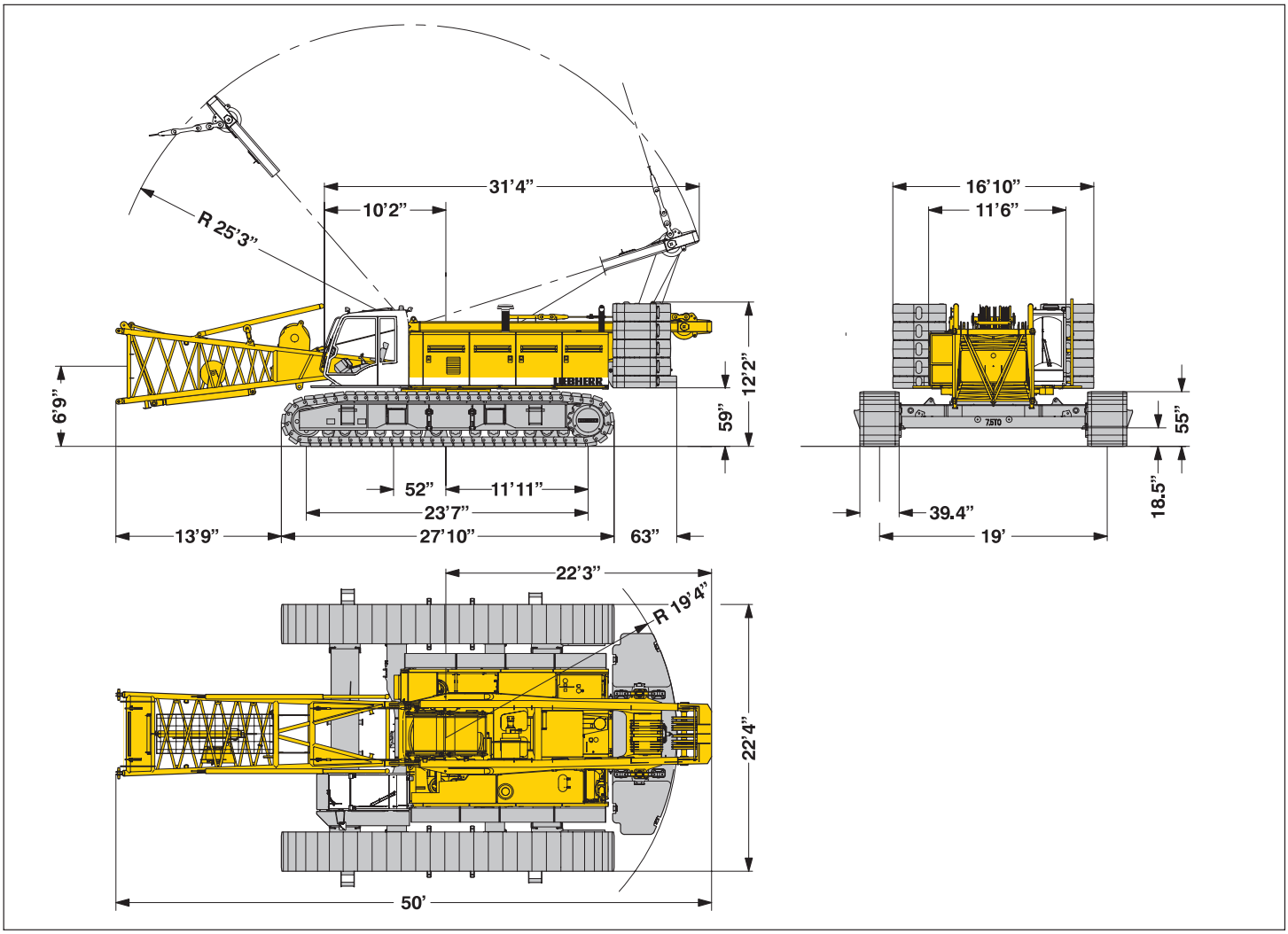

Operating weight

The operating weight includes the basic machine with crawlers, 2 main winches 26.500 lbs and 56 ft main boom, consisting of A–frame, boom foot (23 ft), boom head (33 ft), 121.300 lbs basic counterweight, 33.100 lbs carbody counterweight and 309.000 lbs hook block.

Total weight ———— appr. 344.000 lbs

Ground pressure

Ground bearing pressure ———— 15.5 psi

Equipment

Main boom (No. 2018.xx) max. length ———— 287 ft
High reach (No. 2018.xx and 1309.xx) ———— 344 ft
Luffing jib (No. 1309.xx) max. length ———— 258 ft
Max. combination ———— boom 171 ft and luffing jib 258 ft
Luffing jib (No. 1713.xx) max. length ———— 272 ft
Max. combination ———— boom 161 ft and luffing jib 272 ft
Fixed jib (No. 0806.xx) ———— 36 ft – 105 ft
Fixed jib (No. 1008.xx) ———— 36 ft – 85 ft
Auxiliary jib 53,100 lbs lifting capacity (optional 79.000 lbs)

Remarks

1. The lifting capacities stated are valid for lifting operation only (corres ponds with crane classification according to F.E.M. 1.001, crane group A1)
2. Crane standing on firm, horizontal ground.
3. The weight of the lifting device (hoisting ropes, hook block, shackle etc.) must be deducted from the gross lifting capacity to obtain a net lifting value.
4. Additional equipment on boom (e.g. boom walkways, auxiliary jib) must be deducted to get the net lifting capacity.
5. For max. wind speed please refer to lift chart in operator’s cab or manual.
6. Working radii are measured from centre of swing and under load.
7. The lifting capacities are valid for 360 degrees of swing.
8. Calculation of stability under load is based on DIN 15019 / part 2 / chart 1 and ISO 4305 Table 1 + 2, tipping angle 4º.
9. The structures are calculated according to F.E.M. 1.001 – 1998 (EN 13001–2 / 2004).
10. ANSI B 30.5

Transport dimensions and weights

Basic machine and boom (No. 2018.xx)

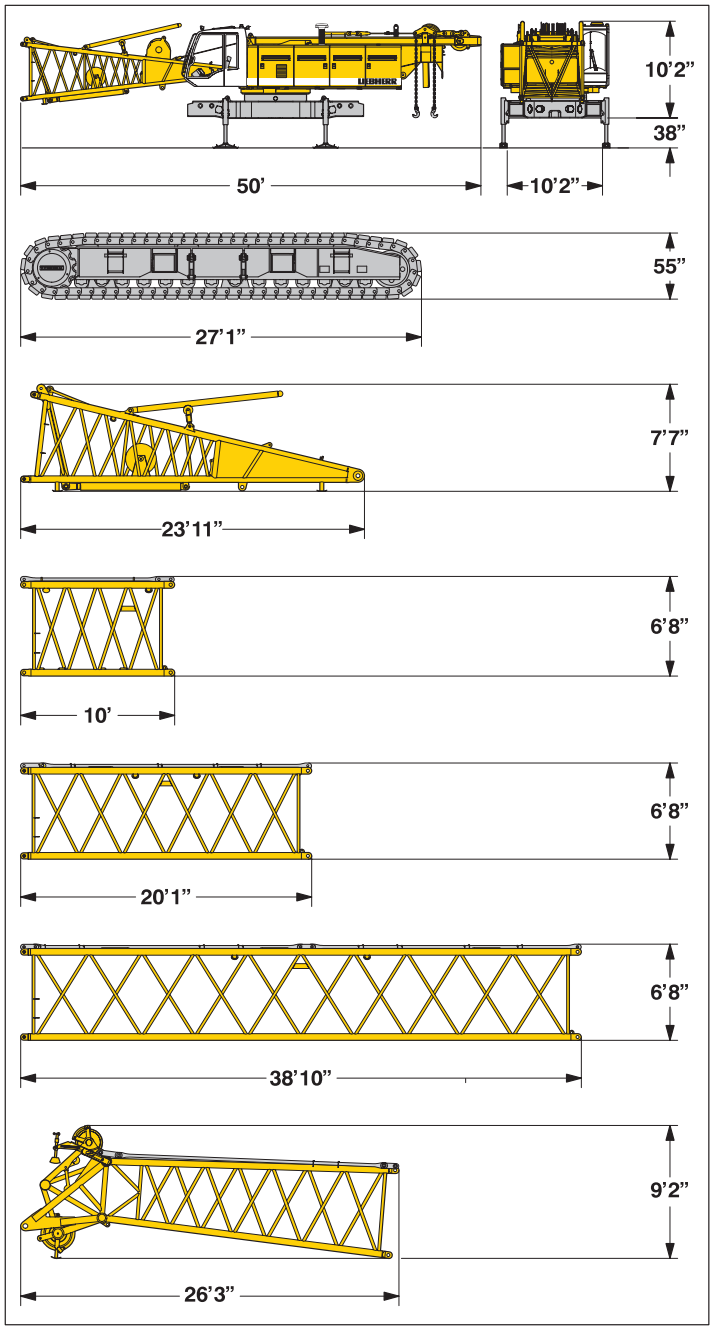

Basic machine

with A–frame, 2x 26.500 lbs crane winches and boom foot, without hoisting ropes, basic counterweight and crawlers

Width	11’6”
Weight in lbs	82,700

Crawler 2x

Flat track shoes	39.4”
Width	55”
Weight in lbs	41,500

Boom foot (No. 2018.23) without winches

Width	7’11”
Weight in lbs	7.100

Boom section (No. 2018.20) 10 ft

Width	7’6”
Weight in lbs*	1.700

Boom section (No. 2018.20) 20 ft

Width	7’6”
Weight in lbs*	2.400

Boom section (No. 2018.20) 38 ft

Width	7’6”
Weight in lbs*	4.200

Boom head (No. 2018.20)

Width	7’6”
Weight in lbs*	6,000

Transport option

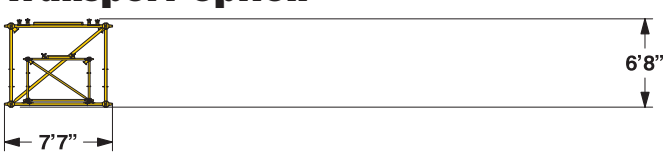

Boom – luffing jib transport option

38 ft boom – and 38 ft jib extension
20 ft boom – and 20 ft jib extension

(No. 2018.xx / 1309.xx)	20ft / 20ft	38ft / 38ft
Length	20’2”	38’10”
Weight in lbs*	3.900	7.000

*) Including pendants

Transport dimensions and weights

Luffing jib (No. 1309.xx)

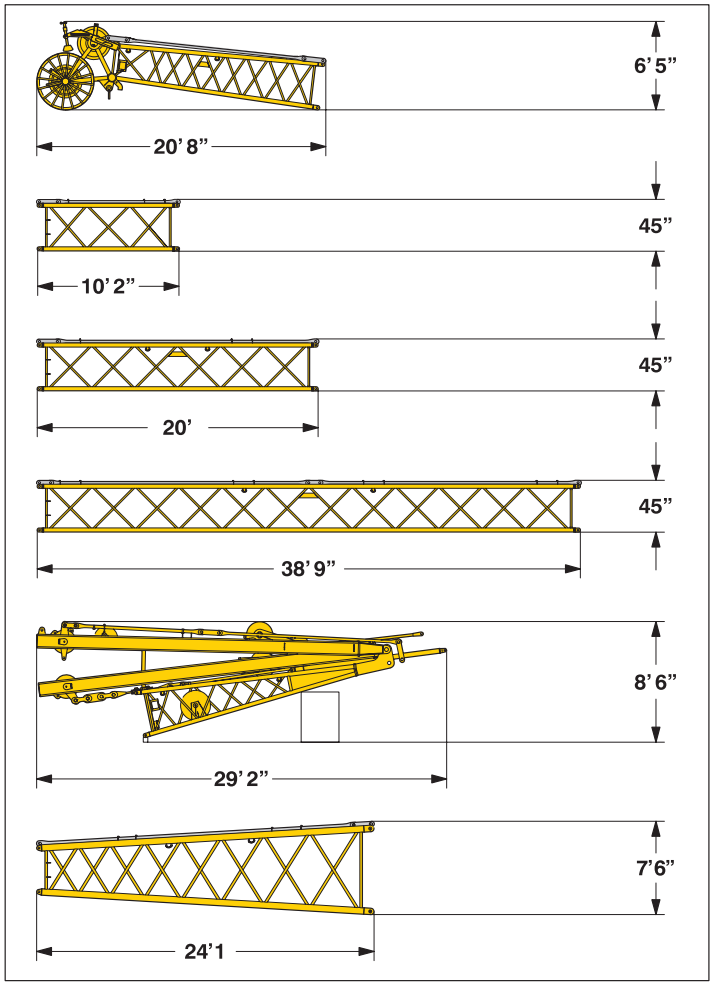

Luffing jib head (No. 1309.22)

Width	59”
Weight in lbs*	2.500

Luffing jib section (No. 1309.20) 10 ft

Width	59”
Weight in lbs*	930

Luffing jib section (No. 1309.20) 20 ft

Width	59”
Weight in lbs*	1.150

Luffing jib section (No. 1309.20) 38 ft

Width	59”
Weight in lbs*	2.100

Luffing jib foot with A-frames (No. 1309.22)

Width	5’7”
Weight in lbs*	10.600

Boom section tapered (No. 2018/1309.20) 23.6 ft

Width	7’6”
Weight in lbs*	2.700

Fixed jib (No. 0806.xx)

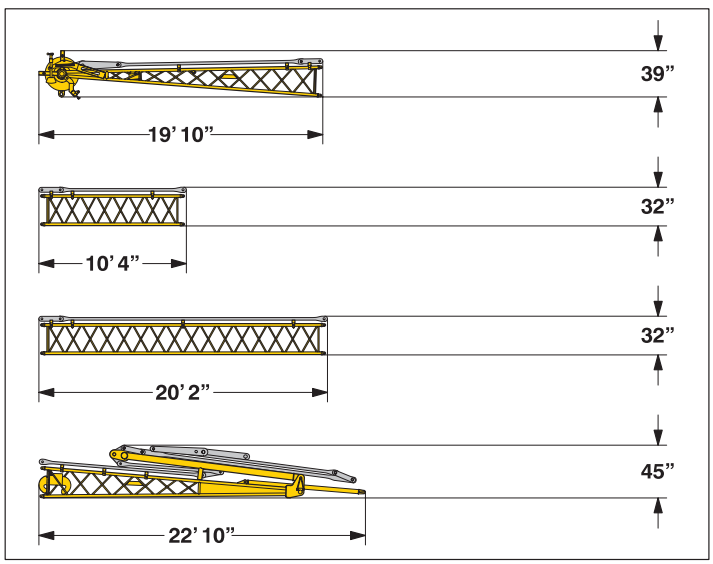

Fixed jib head (No. 0806.16)

Width	45”
Weight in lbs*	980

Fixed jib section (No. 0806.15) 10 ft

Width	38”
Weight in lbs*	245

Fixed jib section (No. 0806.15) 20 ft

Width	38”
Weight in lbs*	430

Fixed jib foot with A-frame (No. 0806.16)

Width	59”
Weight in lbs*	2.050

*) Including pendants

Transport dimensions and weights

Luffing jib (No. 1713.xx)

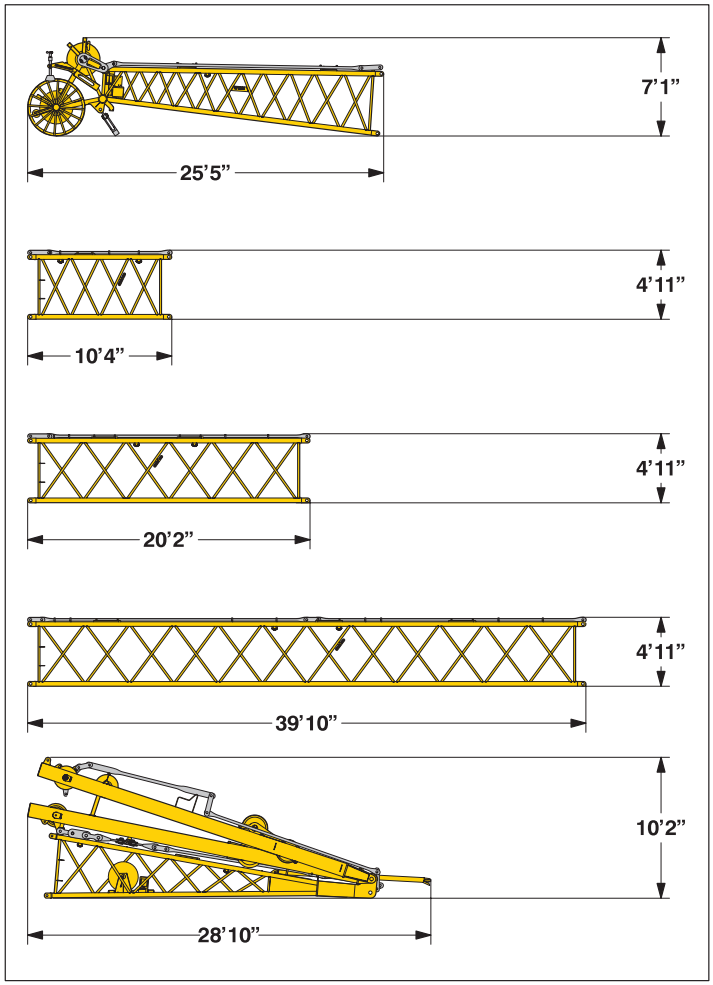

Luffing jib head (No. 1713.21)

Width	59”
Weight in lbs*	2.500

Luffing jib section (No. 1713.18) 10 ft

Width	59”
Weight in lbs*	930

Luffing jib section (No. 1713.18) 20 ft

Width	59”
Weight in lbs*	1.150

Luffing jib section (No. 1713.18) 40 ft

Width	59”
Weight in lbs*	2.120

Luffing jib foot with A-frames (No. 1713.22)

Width	5’7”
Weight in lbs*	10.600

Fixed jib (No. 1008.xx)

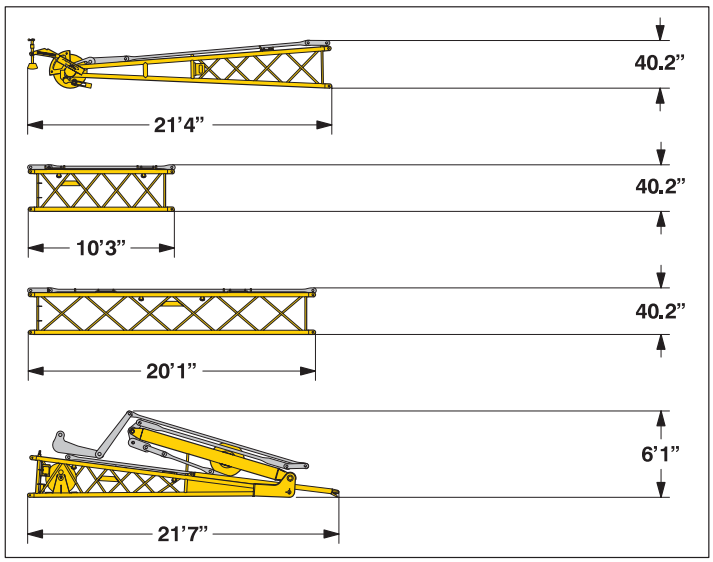

*) Including pendants

Fixed jib head (No. 1008.20)

Width	45”
Weight in lbs*	2.060

Fixed jib section (No. 1008.17) 10 ft

Width	43”
Weight in lbs*	660

Fixed jib section (No. 1008.17) 20 ft

Width	43
Weight in lbs*	1.010

Fixed jib foot with A-frame (No. 1008.20)

Width	59”
Weight in lbs*	4.300

Transport dimensions and weights

Counterweights and hooks

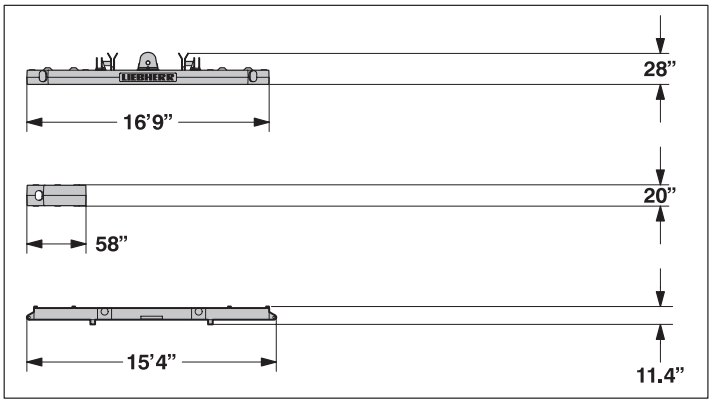

Counterweight	1x
Width	5’3”
Weight in lbs	31.500

Counterweight	8x
Width	53”
Weight in lbs	11.250

Carbody counterweight	2x
Width	28”
Weight in lbs	16.550

Mid fall (option)

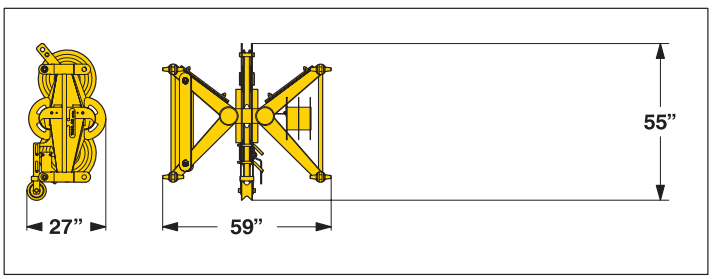

Mid fall section (No. 1309.32)	14 inch
Width	28”
Weight in lbs	600

Hooks

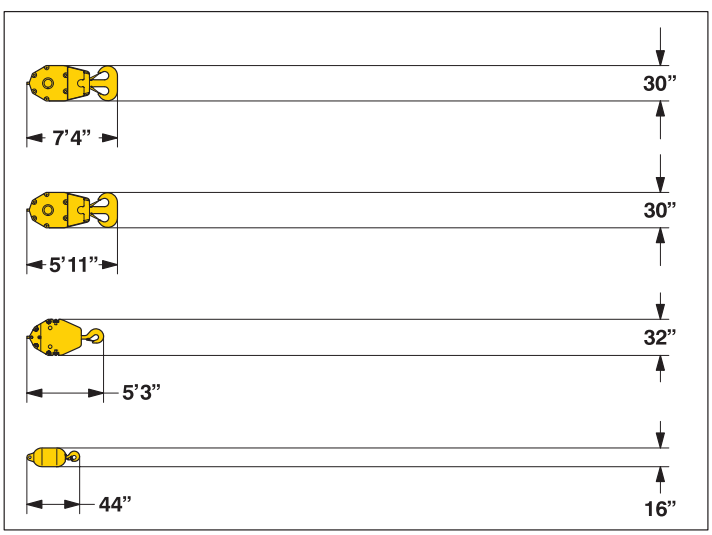

353,000 lbs hook block – 7 sheaves			
Width	25”	30”	35”
Weight in lbs	3,300	4,960	6,610

220,500 lbs hook block – 5 sheaves			
Width	21”	25”	30”
Weightin lbs	2.900	4.000	5.100

88,200 lbs hook block – 1 sheave			
Width	12”	16”	20”
Weight in lbs	1.550	2.400	3.300

27,600 lbs single hook	
Width	16”
Weight in lbs	1.300

Technical description

Engine

Power rating according to ISO 9249, 322 HP at 2000 rpm
Engine type — Liebherr D 926 TI–E
Fuel tank — 206 gal capacity with continuous level indicator and reserve warning
Complies with EPA CARB II / TIER II / and 97/68 EC TIER II OFF–ROAD

Hydraulic system

A double axial displacement pump supplies the open loop hydraulic system, allowing all functions to be operated simultaneously. To minimize peak pressure an automatic working pressure cut–off is integrated in the pump. All filters are electronically monitored.
The use of synthetic environmentally friendly (biodegradable) oils is possible.
Working pressure — max. 5076 PSI
Oil tank capacity — 172 gal

Luffing jib winch

Line pull — max. 23,150 lbs
Rope diameter — 20 mm
Jib luffing — 46 sec. from 15° to 78°

Boom winch

Line pull — max. 33,100 lbs
Rope diameter — 24 mm
Boom up — 104 sec. from 15° to 86°

Swing

Consists of rollerbearing with external teeth, swing drive with fixed axial piston hydraulic motor, spring loaded and hydraulically released multi–disc holding brake, planetary gearbox and pinion.
Free swing with hydraulic moment control reduces wear to a minimum. Alternatively the swing control can be changed to simulate closed loop speed control. Then a multi–disc holding brake acts automatically at zero swing motion.
Swing speed from 0 – 3 rpm continuously variable.

Main winches

Line pull (1st layer) — max. 38,600 lbs
Line pull (7th layer) — 26,500 lbs
Rope diameter — 26 mm
Drum diameter — 23 inch
Rope speed ft/min — 0 – 446
Rope capacity in 7 layers — 1540 ft
The winches are outstanding in their compact design and easy assembly. Propulsion is via a planetary gearbox in an oil bath.
Load support by the hydraulic system; additional safety factor provided by a spring loaded, multi–disc holding brake.
The main winches use pressure controlled, variable flow hydraulic motors. This system features sensors that automatically adjust oil flow to provide max. winch speed depending on load.
Option – winch with freefall system:
Clutch and braking functions on the freefall system are provided by a compact designed, low wear and maintenance free multi–disc brake.

Crawlers

Propulsion through axial piston motor, hydraulically released spring loaded multi–disc brake, crawler tracks, hydraulic chain tensioning device.
Flat track shoes — 39.4 inch
Drive speed — 0 – 0.9 mph

Control

The control system – developed and manufactured by Liebherr – is designed to withstand extreme environmental conditions such as temperature, vibration and electromagnetic interference and to meet all requirements that are needed in heavy duty crane operation.
Complete machine operating data are shown on a high resolution display. Standard operational information is displayed by means of graphical symbols, fault indications are displayed in plain text (more than 10 languages available).
The cranes are equipped with proportional control for all main movements, which can be carried out simultaneously.
A backup control system, that allows limited use of the crane is standard. This feature increases the safety and availability of the crane even further. The crane is operated with 2 multi–directional joysticks, the right for winch I and boom, the left for winch II and swing control.
Option:
Bi–directional double T–levers for simultaneous boom and luffing jib operation.
The crawlers are activated by the two central foot pedals. Additionally, hand levers can be attached to the pedals.

Noise emission

Noise emissions correspond with 2000/14/EC directive on noise emission by equipment used outdoors.

Boom combinations

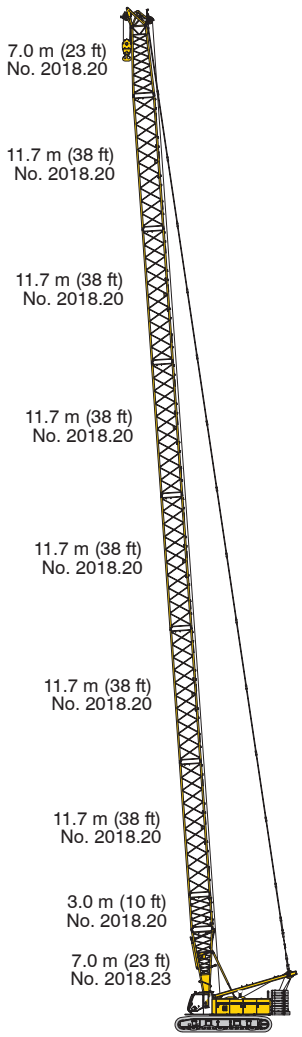

Main boom No. 2018.xx —— 287 ft

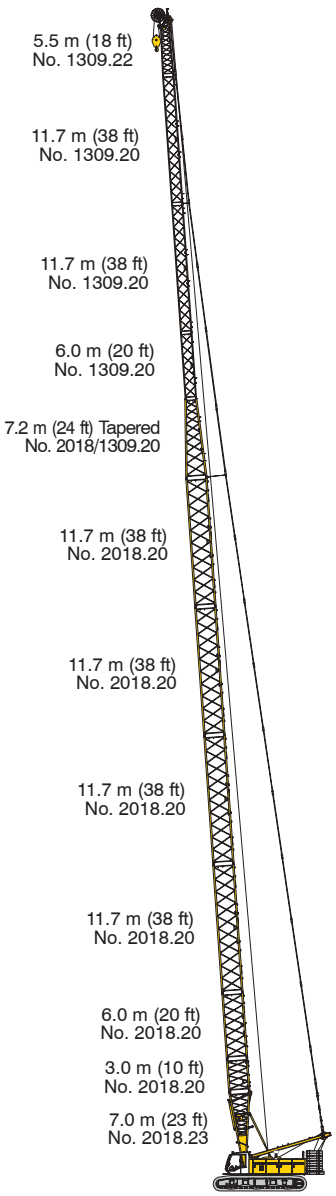

Max. combination		344 ft
Main boom	No. 2018.xx	206 ft
Tapered	No. 2018/1309.xx	24 ft
Luffing jib	No. 1309.xx	114 ft

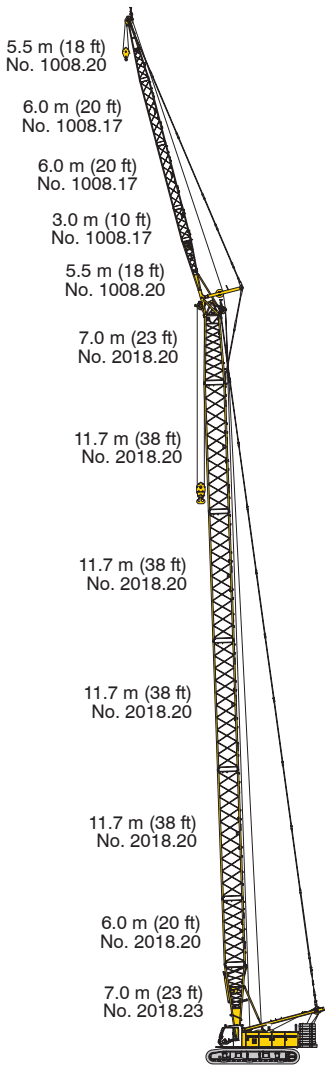

Max. combination		304 ft
Main boom	No. 2018.xx	219 ft
Fixed jib	No. 1008.xx	85 ft
Main boom	No. 2018.xx	229 ft
Fixed jib	No. 1008.xx	66 ft

Boom combinations

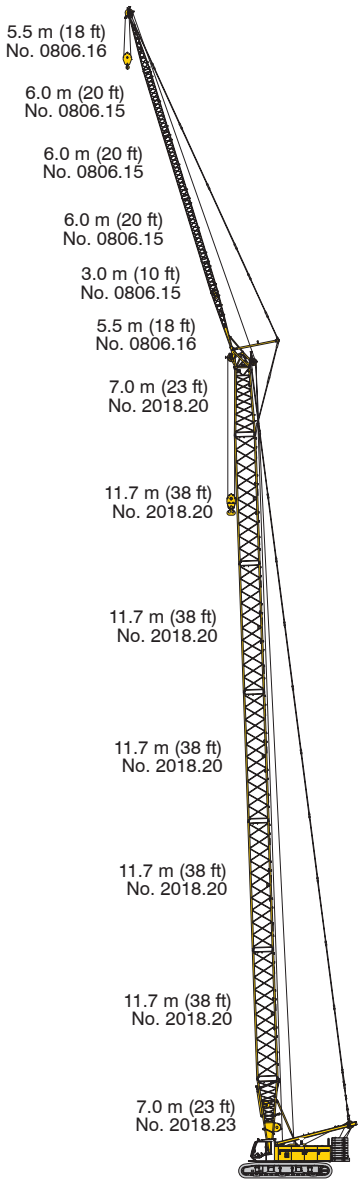

Max. combination		343 ft
Main boom	No. 2018.xx	238 ft
Fixed jib	No. 0806.xx	105 ft
Main boom	No. 2018.xx	248 ft
Fixed jib	No. 0806.xx	95 ft

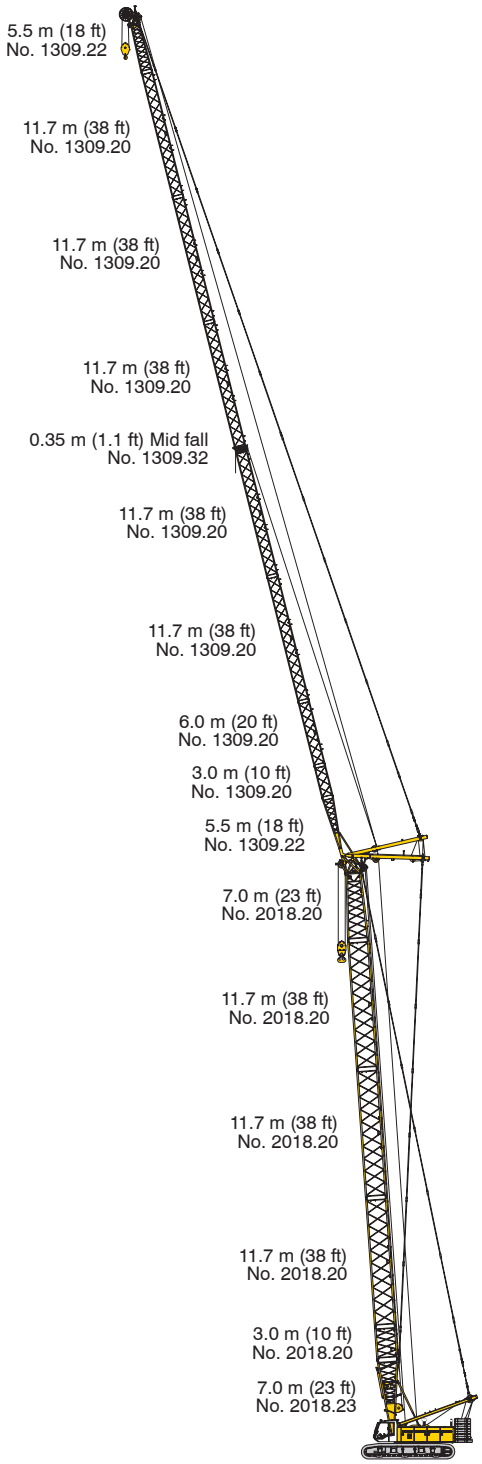

Max. combination		429 ft
Main boom	No. 2018.xx	171 ft
Luffing jib	No. 1309.xx	258 ft
Main boom	No. 2018.xx	181 ft
Luffing jib	No. 1309.xx	228 ft

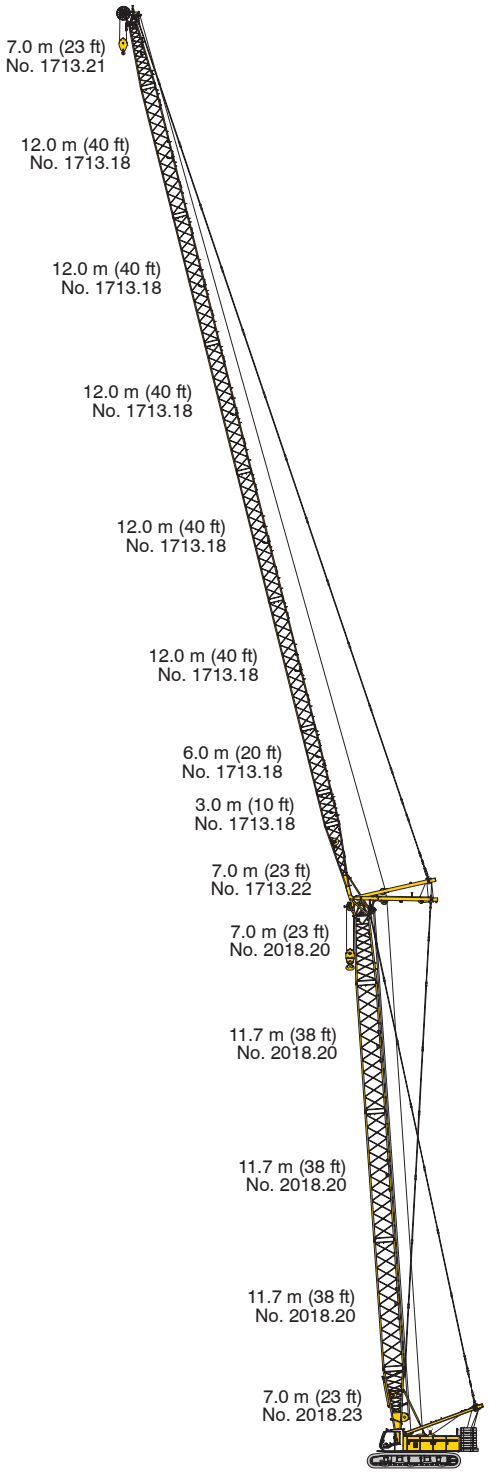

Max. combination		433 ft
Main boom	No. 2018.xx	161 ft
Luffing jib	No. 1713.xx	272 ft
Main boom	No. 2018.xx	181 ft
Luffing jib	No. 1713.xx	184 ft

Self assembly system

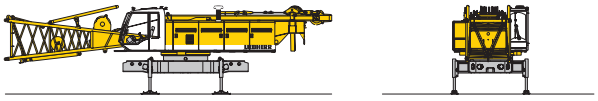

Unloading of basic machine

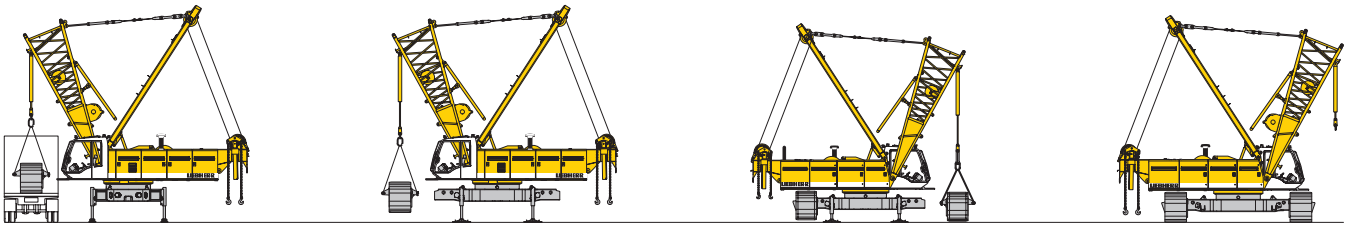

Unloading and assembly of crawlers

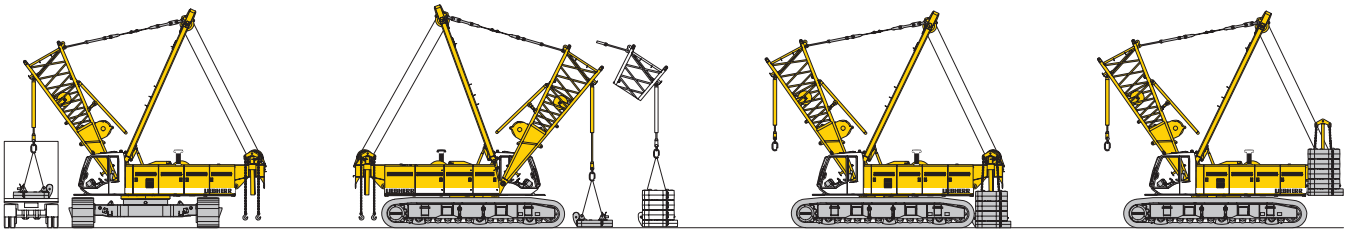

Unloading and assembly of counterweight

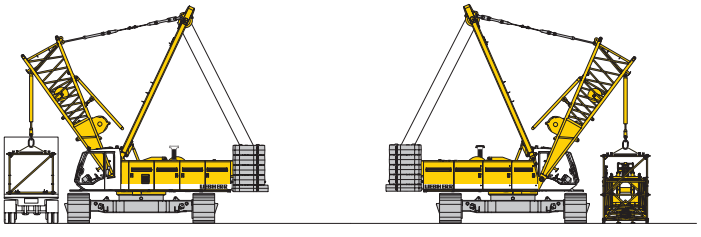

Unloading and assembly of boom

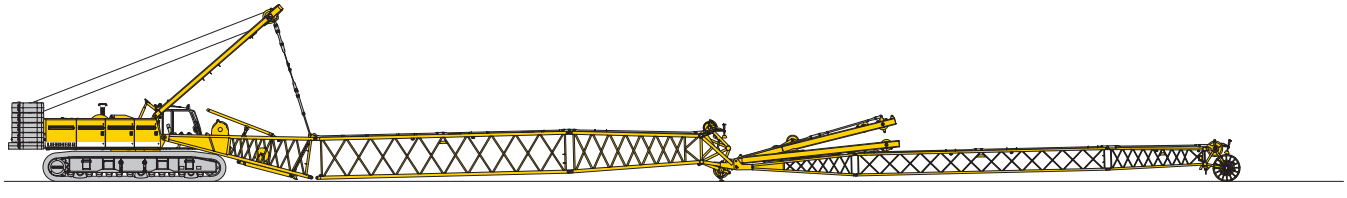

Assembly of boom

Erecting of main boom to working position

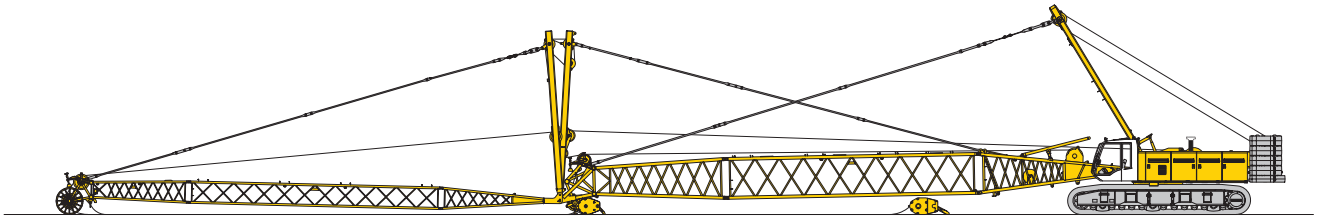

Reeving of hoist and luffing jib ropes

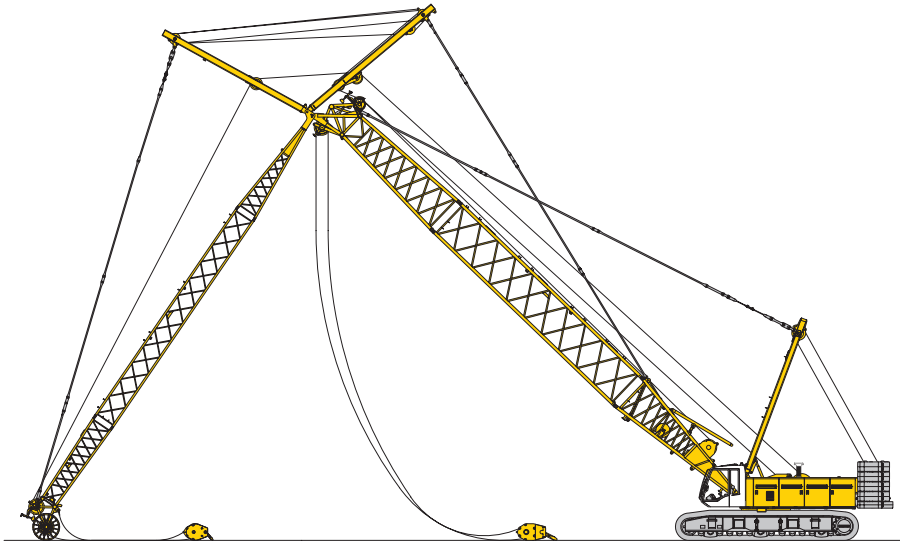

Erecting of main boom and luffing jib

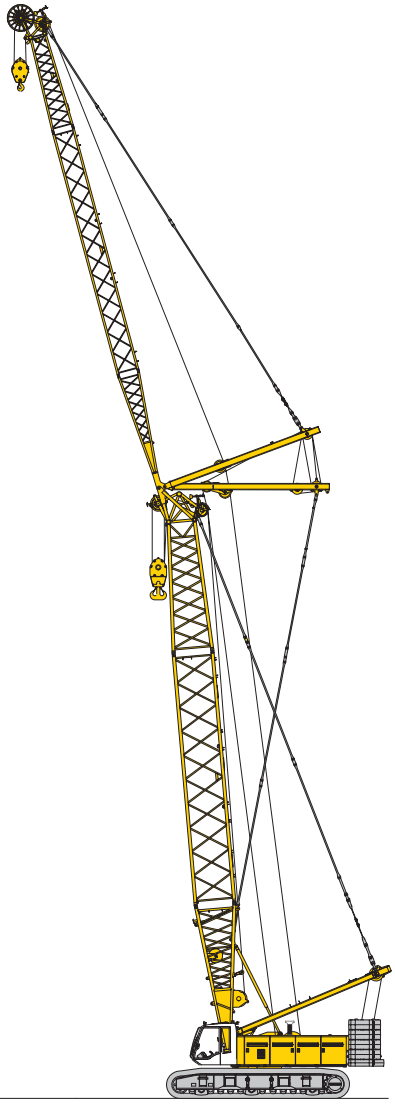

Working position

Working range – main boom (No. 2018.xx) 86° – 15°

121,300 lbs counterweight and 33,100 lbs carbody counterweight

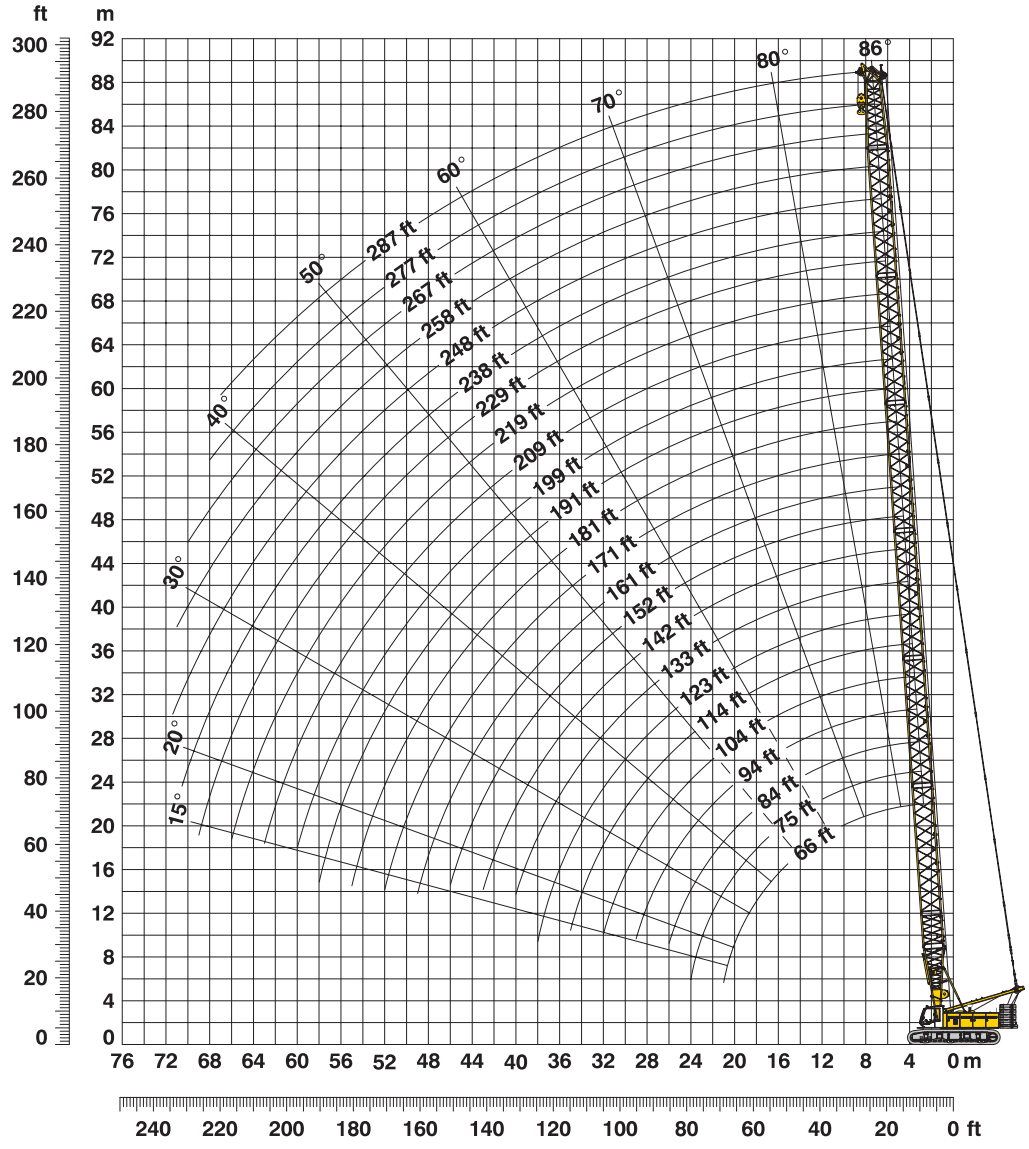

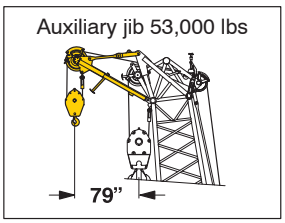

The maximum capacity of the auxiliary jib is 53,000 lbs. The corresponding load chart is programmed in the LMI system.

Main boom configuration (Table1 – No. 2018.xx)

Configuration for boom lengths between 66 ft – 287 ft:

	Length	Amount of boom extensions																							
Boom foot	23 ft	1	1	1	1	1	1	1	1	1	1	1	1	1	1	1	1	1	1	1	1	1	1	1	1
Boom insert	10 ft*		1		1		1		1		1		1		1		1		1		1		1		1
Boom insert	20 ft*	1	1			1	1			1	1			1	1			1	1			1	1	2	2
Boom insert	38 ft*			1	1	1	1	2	2	2	2	3	3	3	3	4	4	4	4	5	5	5	5	5	5
Boom head	23 ft	1	1	1	1	1	1	1	1	1	1	1	1	1	1	1	1	1	1	1	1	1	1	1	1
Boom length (ft)		66	75	84	94	104	114	123	133	142	152	161	171	181	191	199	209	219	229	238	248	258	267	277	287

*Actual lengths of boom sections are metric (e.g. 3 m, 6 m, 11.7 m). The figures shown above are approximate conversions to feet.

Lift chart for main boom (No. 2018.xx)

Capacities in metric tons for boom lengths (66 ft – 287 ft) – with 26,500 lbs winches 121,300 lbs counterweight and 33,100 lbs carbody counterweight

	Boom length in (ft)												
Radius	**66**	**94**	**114**	**133**	**152**	**171**	**191**	**209**	**229**	**248**	**267**	**287**	**Radius**
(ft)	lbs	lbs	lbs	lbs	lbs	lbs	lbs	lbs	lbs	lbs	lbs	lbs	(ft)
12.2	400.0*												12.2
15	302.5	302.5											15
20	298.1	290.2	277.8	244.2	205.0	168.8							20
25	253.2	253.5	232.5	221.9	195.3	166.3	138.2	110.4	91.5	75.9			25
30	189.5	189.7	189.7	186.1	170.6	159.6	133.5	106.6	89.7	75.4	63.1	53.1	30
40	124.3	124.4	124.2	124.0	123.6	123.4	118.9	95.9	84.7	72.9	60.8	50.4	40
50	91.5	91.5	91.2	91.0	90.6	90.2	89.8	87.1	80.2	70.1	58.2	47.9	50
60	71.6	71.8	71.4	71.2	70.7	70.3	69.8	69.4	68.9	66.0	55.4	45.4	60
65	64.3	64.5	64.2	63.9	63.5	63.1	62.5	62.1	61.6	61.1	53.9	44.3	65
70		58.5	58.2	57.9	57.4	57.0	56.5	56.0	55.5	55.0	50.5	43.3	70
80		49.0	48.7	48.4	47.9	47.5	46.9	46.5	45.9	45.4	44.8	41.3	80
90		41.7	41.5	41.2	40.8	40.3	39.8	39.3	38.7	38.2	37.6	36.9	90
95		38.7	38.6	38.3	37.8	37.4	36.8	36.3	35.7	35.2	34.6	34.0	95
100			35.9	35.7	35.2	34.8	34.2	33.7	33.1	32.6	32.0	31.3	100
110			31.4	31.2	30.7	30.3	29.7	29.2	28.6	28.1	27.5	26.8	110
120				27.5	27.0	26.6	26.1	25.6	25.0	24.5	23.9	23.3	120
130				24.4	24.0	23.6	23.1	22.6	22.0	21.4	20.8	20.2	130
140					21.4	21.0	20.5	20.0	19.4	18.8	18.2	17.5	140
150					19.1	18.8	18.2	17.7	17.1	16.6	15.9	15.3	150
160						16.8	16.3	15.8	15.2	14.6	14.0	13.3	160
170						15.0	14.5	14.1	13.5	12.9	12.3	11.6	170
180							13.0	12.5	11.9	11.4	10.8	10.1	180
190							11.6	11.2	10.6	10.1	9.4	8.8	190
200								9.9	9.4	8.9	8.2	7.6	200
205								9.4	8.8	8.3	7.7	7.0	205
210									8.3	7.8	7.1	6.5	210
220									7.2	6.8	6.1	5.5	220
225									6.8	6.3	5.7	5.0	225
230										5.8	5.2	4.6	230
240										5.0	4.4	3.7	240
250											3.6	3.0	250
260											2.9	2.3	260

Above lift chart is for reference only. For actual lift duty please refer to lift chart in operator's cab or manual.
* Capacities over 308,700 lbs require a special heavy duty boom head.

L – boom high reach (No.2018 / 1309.xx) 219 ft – 344 ft

Working range 84° – 15°

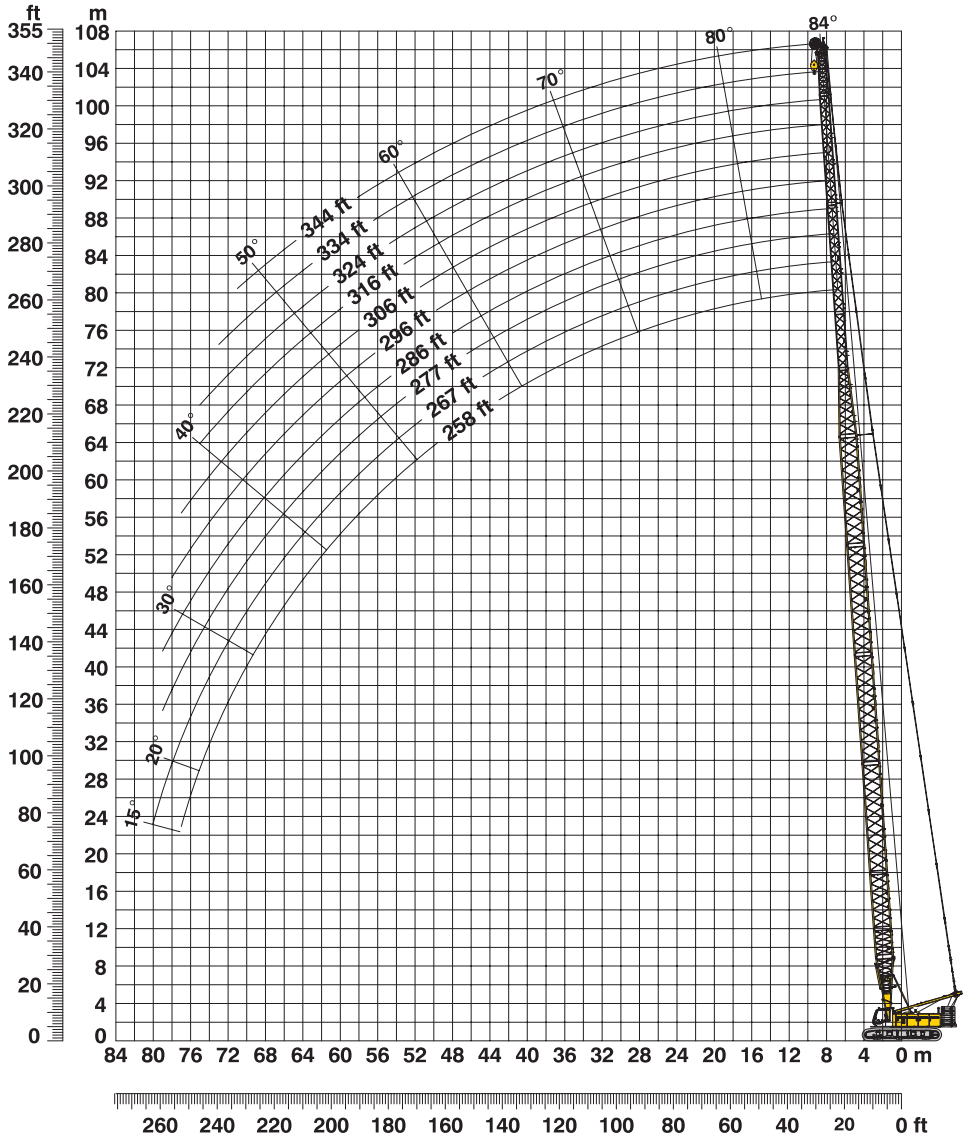

L – boom configuration with 168 ft main boom (No. 2018.xx / No. 1309.xx)

Configuration for L – boom lengths (219 ft – 316 ft)

	Length	Amount of boom and luffing jib extensions										
Boom foot	23 ft	1	1	1	1	1	1	1	1	1	1	1
Boom insert	10 ft*	1	1	1	1	1	1	1	1	1	1	1
Boom insert	20 ft*	1	1	1	1	1	1	1	1	1	1	1
Boom insert	38 ft*	3	3	3	3	3	3	3	3	3	3	3
Tapered	24 ft*	1	1	1	1	1	1	1	1	1	1	1
Luffing insert	10 ft*	1		1		1		1		1		1
Luffing insert	20 ft*		1	1			1	1			1	1
Luffing insert	38 ft*				1	1	1	1	2	2	2	2
Luffing jib head	18 ft	1	1	1	1	1	1	1	1	1	1	1
Max. L – boom length (ft)		219	229	239	248	258	267	277	286	296	306	316

*Actual lengths of boom sections are metric (e.g. 3 m, 6 m, 7.2 m, 11.7 m). The figures shown above are approximate conversions to feet.

Lift chart for L – boom (No. 2018 /1309.xx)

Main boom length 168 ft

Capacities in 1000 lbs
121,300 lbs counterweight and 33,100 lbs carbody counterweight

	Boom length in (ft)				
	219	258	277	296	316
Radius (ft)	lbs	lbs	lbs	lbs	lbs
21.5	99.5				
25	99.1	59.0			
30	97.2	57.5	43.1	33.8	22.9
40	93.3	51.9	38.8	30.5	20.9
50	79.3	47.3	35.1	27.5	19.0
60	64.7	43.3	31.9	24.2	17.3
70	53.3	39.9	29.0	22.1	15.9
80	47.9	36.9	26.8	20.3	14.6
90	41.1	34.1	24.5	18.8	13.6
100	35.5	31.4	22.6	17.3	12.6
110	31.0	28.9	20.6	15.9	11.7
120	27.4	27.0	19.1	14.5	10.7
130	24.4	24.2	18.1	13.5	9.7
140	21.8	21.6	17.1	12.8	9.3
150	19.6	19.4	16.2	12.0	8.8
160	17.7	17.5	15.4	11.3	8.4
170	16.0	15.8	14.6	10.8	8.0
180	14.5	14.3	13.9	10.2	7.6
190	13.1	13.0	12.8	9.7	7.3
200	11.9	11.8	11.6	9.3	6.9
210	10.8	10.7	10.5	8.9	6.6
215	10.3	10.2	10.0	8.7	6.5
240		8.0	7.8	7.3	6.0
250		7.2	6.9	6.6	5.6
260			6.1	5.8	5.0
270			5.2	5.0	4.4
280				4.4	3.7
285				4.0	3.4
290					3.1
305					2.3

Main boom length 206 ft

Capacities in 1000 lbs
121,300 lbs counterweight and 33,100 lbs carbody counterweight

	Boom length in (ft)				
	258	277	296	316	344
Radius (ft)	lbs	lbs	lbs	lbs	lbs
24.1	70.0				
30	69.3	58.1	47.1	36.1	
40	67.0	56.3	44.0	33.7	23.0
50	63.9	53.6	41.0	30.9	21.5
60	57.3	50.0	38.2	28.3	20.3
70	49.1	47.1	35.7	25.1	19.1
80	42.8	41.7	33.5	23.7	18.0
90	38.3	36.5	31.5	22.2	17.0
100	34.4	33.1	29.5	20.7	16.1
110	29.9	29.8	27.6	19.4	15.1
120	25.0	25.5	25.3	18.0	14.2
130	23.3	23.1	23.1	16.6	13.3
140	20.7	20.5	20.5	15.9	12.4
150	18.4	18.3	18.2	15.1	11.9
160	16.5	16.4	16.3	14.4	11.5
170	14.8	14.7	14.6	13.5	11.0
180	13.3	13.2	13.1	12.5	10.6
190	12.0	11.8	11.8	11.4	9.7
200	10.8	10.6	10.6	10.2	8.8
210	9.7	9.6	9.5	9.2	8.0
220	8.7	8.6	8.5	8.2	7.0
230	7.8	7.7	7.3	7.1	6.2
240	6.9	6.7	6.5	6.0	5.3
250	6.0	5.6	5.6	5.1	4.3
260		4.8	4.7	4.4	3.4
270		3.8	3.9	3.6	2.8
280			3.2	2.7	2.3
285			2.7	2.4	2.1
290				2.2	
295				2.0	

Above lift chart is for reference only. For actual lift duty please refer to lift chart in operator's cab or manual.

L – boom configuration with 206 ft main boom (No. 2018.xx / No. 1309.xx)

Configuration for L – boom lengths (258 ft – 344 ft)

	Length	Amount of boom and luffing jib extensions									
Boom foot	23 ft	1	1	1	1	1	1	1	1	1	1
Boom insert	10 ft*	1	1	1	1	1	1	1	1	1	1
Boom insert	20 ft*	1	1	1	1	1	1	1	1	1	1
Boom insert	38 ft*	4	4	4	4	4	4	4	4	4	4
Tapered	24 ft*	1	1	1	1	1	1	1	1	1	1
Luffing insert	10 ft*	1		1		1		1		1	
Luffing insert	20 ft*		1	1			1	1			1
Luffing insert	38 ft*				1	1	1	1	2	2	2
Luffing jib head	18 ft	1	1	1	1	1	1	1	1	1	1
Max. L – boom length (ft)		258	267	277	286	296	306	316	324	334	344

*Actual lengths of boom sections are metric (e.g. 3 m, 6 m, 7.2 m, 11.7 m). The figures shown above are approximate conversions to feet.

Working range – luffing jib (No. 1309.xx) 78° - 15°

Main boom 88° – 45°

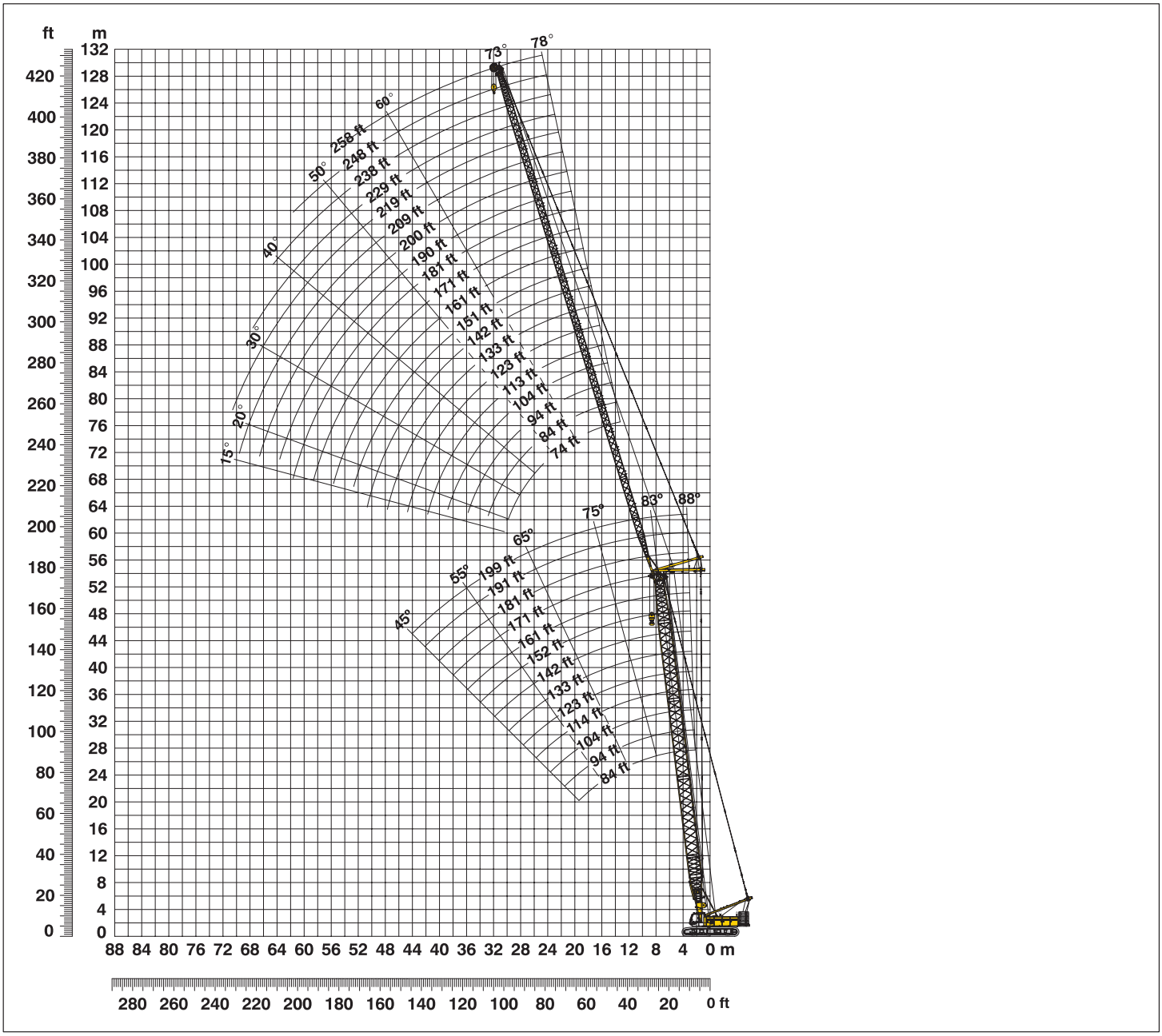

Boom configuration for main boom lengths (84 ft – 199 ft) – see table 1 on page 12

Jib configuration for jib lengths (74 ft – 258 ft)

	Length	Amount of luffing jib extensions																			
Luffing jib foot	18 ft	1	1	1	1	1	1	1	1	1	1	1	1	1	1	1	1	1	1	1	1
Luffing jib insert	10 ft*		1		1		1		1		1		1		1		1		1		1
Luffing jib insert	20 ft*			1	1			1	1			1	1			1	1			1	1
Luffing jib insert	38 ft*	1	1	1	1	2	2	2	2	3	3	3	3	4	4	4	4	5	5	5	5
Luffing jib head	18 ft	1	1	1	1	1	1	1	1	1	1	1	1	1	1	1	1	1	1	1	1
Luffing jib length (ft)		74	84	94	104	113	123	133	142	151	161	171	181	190	200	209	219	228	238	248	258

*Actual lengths of boom sections are metric (e.g. 3 m, 6 m, 11.7 m). The figures shown above are approximate conversions to feet.

Lift chart – tower crane (No. 1309.xx)

Main boom angle 88°

Main boom 84 ft

	Jib length in (ft)							
	74	94	113	133	161	181	228	258
Radius (ft)	lbs	lbs	lbs	lbs	lbs	lbs	lbs	lbs
27.6	104.8							
35	104.8	90.3						
40	102.5	88.4	70.7	56.4				
50	84.4	80.1	68.0	54.6	37.9	29.7		
60	67.2	66.8	61.7	51.2	35.9	28.5	15.9	
70	56.3	54.4	53.9	46.3	34.2	27.1	13.6	9.1
80	47.4	47.8	45.3	41.7	32.7	25.1	13.0	8.7
100		35.5	35.4	33.7	29.1	23.0	11.8	8.2
115			29.7	28.8	22.5	21.5	11.2	7.7
135				23.1	20.6	19.3	10.8	6.9
165					17.2	15.6	10.4	6.1
180						14.1	10.1	5.7
200							9.7	5.4
225							8.5	5.0
240								4.7
255								4.4

Main boom 123 ft

	Jib length in (ft)							
	74	94	113	133	161	181	228	258
Radius (ft)	lbs	lbs	lbs	lbs	lbs	lbs	lbs	lbs
28.9	100.4							
35	99.5	78.6						
40	95.2	76.8	63.0					
45	89.0	75.7	61.8	49.5				
50	82.5	73.7	60.8	48.3	34.9			
55	73.8	70.9	59.7	47.5	34.1	27.2		
65	63.9	62.1	57.4	45.4	32.6	25.3	12.7	
70	58.5	56.5	55.1	43.7	31.9	24.7	12.4	8.4
80	49.2	49.1	46.5	40.3	30.6	23.7	11.8	8.1
100		37.1	36.6	33.5	28.1	21.9	11.2	7.8
120			21.1	27.6	19.9	19.6	10.6	7.3
140				17.7	18.3	17.4	10.2	6.5
165					15.4	14.6	9.5	5.9
185						12.2	8.0	5.5
230							6.3	4.8
255								4.4

Main boom 142 ft

	Jib length in (ft)							
	74	94	113	133	161	181	228	258
Radius (ft)	lbs	lbs	lbs	lbs	lbs	lbs	lbs	lbs
29.6	88.3							
35	87.9	70.8						
40	83.3	69.4	56.8					
45	76.2	67.7	56.1	44.8				
50	72.5	65.5	55.1	43.7	32.3			
55	68.9	62.6	53.9	42.9	31.8	25.2		
65	61.4	56.9	50.6	41.6	30.6	24.2	12.1	
70	57.7	54.2	49.2	40.7	30.1	23.7	11.9	8.1
85	25.8	45.6	43.7	37.3	28.5	22.4	11.2	7.6
100		37.4	36.9	32.9	26.9	21.2	10.5	7.4
120			28.9	27.5	17.7	18.8	10.0	6.9
140				15.8	15.9	16.5	9.6	6.4
165					14.1	13.6	8.9	5.8
185						12.1	7.5	5.4
230							5.8	4.7
260								4.3

Main boom 171 ft

	Jib length in (ft)							
	74	94	113	133	161	181	209	228
Radius (ft)	lbs	lbs	lbs	lbs	lbs	lbs	lbs	lbs
31	64.1							
35	63.1	52.2						
40	61.5	51.4	43.4					
45	59.3	50.3	42.8	35.7				
50	56.4	49.1	41.9	35.3	27.0			
55	53.7	47.6	40.8	34.7	26.7	22.0		
60	50.1	46.0	39.8	33.9	25.9	21.7	16.3	
65	48.3	44.3	38.8	33.1	25.4	21.4	15.8	10.4
85	38.4	38.1	34.8	30.3	23.5	19.9	14.7	9.7
100		32.4	28.9	28.1	20.9	18.9	14.0	9.4
120			15.2	14.5	15.2	16.2	13.2	9.1
140				13.2	12.7	13.5	12.5	7.7
170					9.7	10.5	11.6	5.4
185						9.7	11.1	5.3
215							8.2	5.0
230								4.7

Main boom 181 ft

	Jib length in (ft)							
	74	94	113	133	161	181	228	258
Radius (ft)	lbs	lbs	lbs	lbs	lbs	lbs	lbs	lbs
30.6	70.2							
35	68.7	53.0						
40	66.4	53.0	46.4					
45	63.5	53.0	45.7	37.9				
50	60.1	52.7	44.7	37.3	28.5			
55	57.2	51.1	43.6	36.7	28.2	22.9		
65	51.5	47.5	41.5	35.1	27.3	22.2	11.0	
70	49.4	45.4	40.4	34.4	26.8	21.8	10.5	7.3
85	40.1	39.2	37.0	32.2	24.7	20.7	10.1	7.2
100		33.0	30.9	29.8	22.2	19.7	9.7	7.1
120			15.4	15.5	17.0	17.1	9.3	6.7
140				13.6	14.8	14.7	7.9	6.1
165					11.6	12.1	5.9	5.5
185						10.3	5.5	5.1
230							4.8	4.5
260								3.8

Main boom 199 ft

	Jib length in (ft)							
	74	84	94	104	113			
Radius (ft)	lbs	lbs	lbs	lbs	lbs			
31.6	54.1							
35	54.0	49.4						
40	52.3	48.1	44.4	41.3	38.0			
45	50.8	46.8	43.1	40.2	37.4			
50	48.9	45.6	41.9	39.2	36.5			
55	46.9	44.2	41.0	38.3	35.8			
60	44.8	42.7	40.1	37.4	34.9			
65	42.8	41.0	38.9	36.5	34.0			
70	41.2	39.2	37.6	35.5	33.1			
75	39.5	38.0	36.1	34.4	32.3			
80	37.6	36.6	34.9	33.3	31.5			
85	35.2	35.1	33.8	32.3	30.6			
95		30.4	31.1	30.5	29.0			
100			28.9	29.4	28.3			
110				16.2	15.5			
120					14.7			

Capacities in 1000 lbs with luffing jib (No. 1309.xx) 121,300 lbs counterweight + 33,100 lbs carbody counterweight. Above lift chart is for reference only. For actual lift duty and complete chart with all available configurations please refer to lift chart in operator's cab or manual.

Lift chart – luffing jib (No. 1309.xx)

Main boom angle 83°

Main boom 84 ft

	Jib length in (ft)							
	74	94	113	133	161	181	228	258
Radius (ft)	lbs	lbs	lbs	lbs	lbs	lbs	lbs	lbs
41.3	104.9							
50	95.3	87.5						
55	84.4	84.1	68.5					
60	74.8	74.6	67.6	54.1				
70	62.6	62.3	60.4	50.2	35.4			
75	57.5	57.2	55.8	47.9	34.5	27.3		
85	49.4	49.0	46.8	43.2	32.9	25.3		
90		45.8	44.0	41.1	32.2	24.8	12.9	
95		42.3	41.7	39.0	31.5	24.3	12.6	9.0
105		37.6	36.8	34.9	29.7	23.2	12.1	8.4
125			26.6	27.9	25.6	21.3	11.3	7.6
140				23.0	22.7	19.7	11.0	7.0
170					17.9	15.8	10.6	6.1
190						13.9	10.2	5.7
235							8.4	4.9
265								4.4

Main boom 123 ft

	Jib length in (ft)							
	74	94	113	133	161	181	228	258
Radius (ft)	lbs	lbs	lbs	lbs	lbs	lbs	lbs	lbs
46	97.4							
55	83.1	76.0						
60	74.6	74.1	61.1					
65	67.5	67.1	60.1	47.8				
75	56.6	56.3	55.9	46.2	32.6			
80	52.4	52.0	51.7	44.5	32.0	24.6		
95	26.6	42.2	41.9	39.4	30.2	23.3	11.8	
100		39.7	39.4	37.7	29.6	22.9	11.6	8.6
110		35.3	35.0	34.3	28.3	22.0	11.3	8.0
130			28.4	28.1	22.8	20.1	10.7	7.3
150				19.6	20.7	17.8	10.4	6.6
175					16.7	14.5	10.0	5.9
195						12.7	9.3	5.5
240							7.6	4.8
260								4.6
270								4.5

Main boom 142 ft

	Jib length in (ft)							
	74	94	113	133	161	181	228	258
Radius (ft)	lbs	lbs	lbs	lbs	lbs	lbs	lbs	lbs
48.4	83.9							
55	80.1	69.3						
60	73.8	67.6	56.2					
70	61.1	60.6	54.7	43.9				
75	56.1	55.7	53.5	43.2	30.8			
80	51.9	51.5	51.1	42.3	30.6	24.2		
95	42.0	41.8	41.5	38.6	29.0	22.5	11.4	
105		37.0	36.7	35.6	28.0	21.8	11.1	7.9
110		34.9	34.7	34.1	27.5	21.5	10.9	7.9
130			28.2	27.8	19.5	19.6	10.5	7.2
150				16.8	18.0	17.5	10.1	6.5
180					13.8	14.1	9.3	5.7
200						11.5	8.2	5.3
245							6.6	4.7
260								4.6
270								4.5

Main boom 171 ft

	Jib length in (ft)							
	74	94	113	133	161	181	228	258
Radius (ft)	lbs	lbs	lbs	lbs	lbs	lbs	lbs	lbs
51.9	65.5							
60	62.1	53.0						
65	59.2	52.6	45.4					
70	56.7	51.1	44.9	37.2				
80	51.1	47.6	42.7	36.3	27.5			
85	47.4	45.9	41.5	35.7	27.3	21.4		
100	24.4	38.6	37.9	33.4	24.4	20.6	10.1	
110		34.4	34.0	31.5	22.5	20.0	9.9	7.4
115		32.5	32.2	30.6	21.5	19.7	9.8	7.3
135			17.1	17.6	17.8	17.6	9.5	6.7
155				14.7	16.4	15.6	9.1	6.1
180					13.1	13.5	8.3	5.6
200						11.4	6.9	5.2
245							5.3	4.5
260								4.4
275								4.2

Main boom 181 ft

	Jib length in (ft)							
	74	94	113	133	161	181	209	228
Radius (ft)	lbs	lbs	lbs	lbs	lbs	lbs	lbs	lbs
53.1	60.1							
60	57.9	50.5						
65	55.3	49.3	42.3					
75	50.1	45.9	41.0	34.8				
80	48.3	44.3	39.8	34.3	25.4			
85	46.8	42.8	38.5	33.7	25.2	21.2		
95	41.2	40.0	36.4	32.1	24.4	20.2	14.8	
100	38.6	38.3	35.3	31.4	24.0	19.9	14.7	9.7
120		20.3	30.4	28.4	21.0	18.8	13.8	9.5
135			16.5	17.9	17.6	17.3	13.2	9.4
155				14.7	15.9	15.3	12.6	9.0
180					13.0	12.9	11.4	7.9
200						11.4	9.9	6.6
230							8.5	5.2
240								5.2
245								5.1

Main boom 199 ft

	Jib length in (ft)							
	74	84	94	104	113			
Radius (ft)	lbs	lbs	lbs	lbs	lbs			
55.4	50.2							
60	49.1	46.1						
65	47.2	44.6	42.1	39.2				
70	45.4	43.0	40.7	38.4	36.2			
75	43.5	41.4	39.3	37.2	35.1			
80	41.4	39.9	37.9	36.0	34.1			
85	40.2	38.4	36.7	34.9	33.0			
90	39.0	37.1	35.5	33.9	32.1			
95	37.6	36.1	34.3	32.8	31.2			
100	36.5	34.9	33.4	31.7	30.2			
110		32.7	31.4	30.2	28.6			
120			29.3	28.5	27.3			
125				27.7	19.0			
130				17.3	18.1			
135					17.1			
140					15.8			

Capacities in 1000 lbs with luffing jib (No. 1309.xx) 121,300 lbs counterweight + 33,100 lbs carbody counterweight. Above lift chart is for reference only. For actual lift duty and complete chart with all available configurations please refer to lift chart in operator's cab or manual.

Lift chart – luffing jib (No. 1309.xx)

Main boom angle 75°

Main boom 84 ft

	Jib length in (ft)							
	74	94	113	133	161	181	228	258
Radius (ft)	lbs	lbs	lbs	lbs	lbs	lbs	lbs	lbs
62.7	68.4							
75	55.0	54.5						
80	50.8	50.4	50.0					
90	44.0	43.7	43.3	42.8				
100	38.7	38.4	38.1	37.6	31.6			
110		34.2	33.9	33.4	30.6	23.6		
120		26.6	30.4	30.0	28.9	22.8		
130			27.5	27.1	26.5	21.9	11.4	
135			26.3	25.9	25.3	21.5	11.4	
145				23.7	23.1	20.5	11.2	7.2
155				21.7	21.1	19.5	11.0	6.8
180					17.3	16.7	10.7	6.1
200						14.5	10.3	5.6
245							8.5	4.9
260								4.8
275								4.7

Main boom 123 ft

	Jib length in (ft)							
	74	94	113	133	161	181	228	258
Radius (ft)	lbs	lbs	lbs	lbs	lbs	lbs	lbs	lbs
72.7	54.6							
85	45.2	44.7						
90	42.1	41.7	41.2					
100	37.1	36.7	36.2	35.7				
110	32.9	32.6	32.2	31.7	29.4			
120		29.3	28.9	28.5	27.8	22.1		
130		26.5	26.2	25.8	25.1	21.6		
140			23.9	23.5	22.8	20.9	10.3	
145			22.8	22.4	21.8	20.5	10.1	
150				21.5	20.8	20.1	10.1	7.0
165				18.9	18.3	17.9	9.9	6.5
190					15.1	14.6	9.4	5.9
210						12.6	9.1	5.4
255							8.2	4.8
260								4.8
285								4.6

Main boom 142 ft

	Jib length in (ft)							
	74	94	113	133	161	181	228	258
Radius (ft)	lbs	lbs	lbs	lbs	lbs	lbs	lbs	lbs
77.8	48.9							
90	41.0	40.5						
95	38.4	37.9	37.4					
105	34.0	33.5	33.1	32.6				
115	26.6	30.0	29.6	29.1	27.9			
125		27.0	26.7	26.2	25.5	21.1		
130		25.8	25.4	24.9	24.2	21.0		
145			22.1	21.7	21.0	20.1	10.3	
150			21.2	20.8	20.1	19.6	10.2	
160				19.1	18.4	17.9	10.1	6.6
170				17.6	17.0	16.5	10.0	6.3
200					13.4	13.0	9.7	5.6
215						11.7	9.4	5.3
265							7.1	4.7
280								4.6
290								4.6

Main boom 171 ft

	Jib length in (ft)							
	74	94	113	133	161	181	228	258
Radius (ft)	lbs	lbs	lbs	lbs	lbs	lbs	lbs	lbs
85.2	41.9							
95	36.7	36.1						
105	32.4	31.9	31.5					
110	30.6	30.2	29.7	29.1				
120	27.5	27.1	26.1	26.2				
125		25.8	25.4	24.8	23.8			
135		23.4	23.0	22.5	21.8	19.3		
140		22.3	22.0	21.5	20.7	19.1		
155			19.2	18.8	18.1	17.6	9.5	
160			18.4	18.0	17.3	16.8	9.5	
165				17.3	16.6	16.1	9.4	6.3
180				15.3	14.7	14.2	9.2	6.0
205					12.1	11.7	9.0	5.4
225						10.1	8.5	5.1
270							6.4	4.5
300								4.3

Main boom 181 ft

	Jib length in (ft)							
	74	94	113	133	161	181	209	228
Radius (ft)	lbs	lbs	lbs	lbs	lbs	lbs	lbs	lbs
87.7	39.7							
100	33.8	33.3						
105	31.9	31.3	30.8					
115	28.5	28.0	27.5	27.0				
125	25.7	25.3	24.9	24.3	22.7			
135		22.9	22.5	22.0	21.3	18.5		
140		21.9	21.5	21.0	20.3	18.4		
155			18.8	18.4	17.7	17.2	13.0	9.3
160			18.1	17.6	16.9	16.4	12.8	9.3
180				15.0	14.3	13.9	12.3	9.0
205					11.8	11.4	10.7	8.7
225						9.8	9.2	8.3
255							7.3	6.9
275								5.9

Main boom 199 ft

	Jib length in (ft)							
	74	84	94	104	113			
Radius (ft)	lbs	lbs	lbs	lbs	lbs			
92.5	35.8							
100	32.6	32.3						
105	30.7	30.4	30.1	29.8				
110	29.0	28.7	28.5	28.1	28.0			
115	27.5	27.2	26.9	26.5	26.5			
120	26.1	25.8	25.6	25.3	25.1			
125	24.8	24.5	24.3	24.0	23.9			
130	23.5	23.3	23.1	22.9	22.7			
140		21.2	21.0	20.8	20.6			
145			20.1	19.9	19.7			
150			19.2	19.0	18.9			
155				18.2	18.0			
160				17.4	17.3			
165					16.6			

Capacities in 1000 lbs with luffing jib (No. 1309.xx) 121,300 lbs counterweight + 33,100 lbs carbody counterweight. Above lift chart is for reference only. For actual lift duty and complete chart with all available configurations please refer to lift chart in operator's cab or manual.

Lift chart – luffing jib (No. 1309.xx)

Main boom angle 65°

Main boom 84 ft

	Jib length in (ft)							
	74	94	113	133	161	181	228	258
Radius (ft)	lbs	lbs	lbs	lbs	lbs	lbs	lbs	lbs
87.8	42.8							
100	36.6	36.1						
110	32.5	32.1	31.7					
125		27.4	27.1	26.6				
130		26.1	25.8	25.3				
140			23.5	23.1	22.4			
150			21.5	21.1	20.4	19.9		
170				17.9	17.3	16.8		
180					15.9	15.5	10.7	
195					14.2	13.8	10.4	5.8
200					13.7	13.3	10.3	5.8
215						11.9	10.1	5.5
240							9.0	5.1
260							7.8	4.8
280								4.8
290								4.8

Main boom 123 ft

	Jib length in (ft)							
	74	94	113	133	161	181	228	258
Radius (ft)	lbs	lbs	lbs	lbs	lbs	lbs	lbs	lbs
104.1	32.0							
120	26.9	26.4						
130	24.3	23.9	23.4					
140		21.7	21.3	20.8				
150		19.9	19.5	19.0				
155			18.7	18.2	17.5			
165			17.2	16.7	16.0	15.4		
185				14.3	13.6	13.1		
195					12.6	12.1	10.1	
210					11.2	10.8	9.7	5.7
215					10.8	10.4	9.3	5.5
230						9.3	8.2	5.2
240							7.6	5.1
275							5.7	4.7
300								4.0
305								3.8

Main boom 142 ft

	Jib length in (ft)							
	74	94	113	133	161	181	228	258
Radius (ft)	lbs	lbs	lbs	lbs	lbs	lbs	lbs	lbs
112.4	27.6							
125	24.2	23.7						
135	21.9	21.5	21.0					
140	20.9	20.5	20.0					
150		18.7	18.3	17.8				
155		17.9	17.5	17.0				
165			16.1	15.6	14.9			
175			14.9	14.4	13.7	13.1		
195				12.3	11.6	11.1		
205					10.8	10.3	9.1	
220					9.6	9.1	8.0	5.4
240						7.8	6.8	5.1
285							4.6	3.7
315								2.8

Main boom 171 ft

	Jib length in (ft)							
	74	94	113	133	161	181	228	258
Radius (ft)	lbs	lbs	lbs	lbs	lbs	lbs	lbs	lbs
124.4	22.1							
140	19.0	18.5						
150	17.4	16.9	16.4					
160		15.5	15.0	14.5				
170		14.2	13.8	13.3				
175			13.3	12.8	11.9			
190			11.8	11.3	10.5	10.0		
205				10.1	9.3	8.8		
215					8.6	8.1	6.3	
230					7.7	7.2	5.5	4.1
235					7.4	6.9	5.2	3.9
255						5.8	4.4	3.1
285							3.3	2.1
300							2.9	

Main boom 181 ft

	Jib length in (ft)							
	74	94	113	133	161	181	209	228
Radius (ft)	lbs	lbs	lbs	lbs	lbs	lbs	lbs	lbs
128.6	20.4							
140	18.3	17.7						
150	16.7	16.2						
155	16.0	15.5	15.0					
165		14.2	13.8	13.2				
170		13.7	13.2	12.7				
180			12.2	11.7	10.8			
190			11.3	10.8	10.0	9.1		
210				9.2	8.5	7.8	6.6	
220					7.8	7.2	6.0	5.3
235					6.9	6.4	5.3	4.5
255						5.4	4.5	3.7
285							3.5	2.8
305								2.2

Main boom 199 ft

	Jib length in (ft)							
	74	84	94	104	113			
Radius (ft)	lbs	lbs	lbs	lbs	lbs			
136.5	17.4							
140	16.9							
145	16.1	15.8						
150	15.4	15.1	14.8					
155	14.8	14.4	14.2	13.9				
160	14.1	13.8	13.6	13.3	13.1			
165		13.3	13.0	12.7	12.5			
170		12.7	12.5	12.2	12.0			
175			12.0	11.7	11.5			
180			11.5	11.2	11.1			
185				10.8	10.6			
190				10.3	10.2			
195					9.8			
200					9.4			

Capacities in 1000 lbs with luffing jib (No. 1309.xx) 121,300 lbs counterweight + 33,100 lbs carbody counterweight. Above lift chart is for reference only. For actual lift duty and complete chart with all available configurations please refer to lift chart in operator's cab or manual.

Lift chart – luffing jib (No. 1309.xx)

Main boom angle 45°

Main boom 84 ft

	Jib length in (ft)							
	74	94	113	133	161	181	228	258
Radius (ft)	lbs	lbs	lbs	lbs	lbs	lbs	lbs	lbs
129.7	23.7							
140	21.5							
150		19.3						
155		18.4						
165			16.6					
175			15.3					
180				14.3				
195				12.7				
205					11.2			
220					10.0	9.5		
240						8.2		
260							6.0	
280							5.1	4.3
285							4.9	4.1
300								3.6
310								3.2

Main boom 123 ft

	Jib length in (ft)						
	74	94	113	133	161	181	228
Radius (ft)	lbs	lbs	lbs	lbs	lbs	lbs	lbs
156.9	15.5						
165	14.5						
173		13.0					
185		11.8					
190			11.0				
200			10.2				
205				9.2			
220				8.2			
230					6.9		
245					6.1	5.6	
260						4.9	
265						4.7	
285							2.8
290							2.7
300							2.3
310							2.0

Main boom 142 ft

	Jib length in (ft)							
	74	94	113	133	161	181	228	258
Radius (ft)	lbs	lbs	lbs	lbs	lbs	lbs	lbs	lbs
170.8	12.1							
180	11.2							
190		9.9						
200		9.1						
205			8.3					
215			7.7					
220				6.9				
235				6.1				
245					4.8			
260					4.2	3.7		
265					4.0	3.5		
280						3.0		

Main boom 171 ft

	Jib length in (ft)			
	74	94	113	133
Radius (ft)	lbs	lbs	lbs	lbs
191	7.9			
195	7.7			
200	7.3			
210		6.2		
215		6.0		
225			5.0	
230			4.8	
235			4.6	
240				3.8
245				3.6
250				3.4
255				3.3

Capacities in 1000 lbs with luffing jib (No. 1309.xx) 121,300 lbs counterweight + 33,100 lbs carbody counterweight. Above lift chart is for reference only. For actual lift duty and complete chart with all available configurations please refer to lift chart in operator's cab or manual.

Working range – luffing jib (No. 1713.xx) 78° - 15°

Main boom 88° – 45°

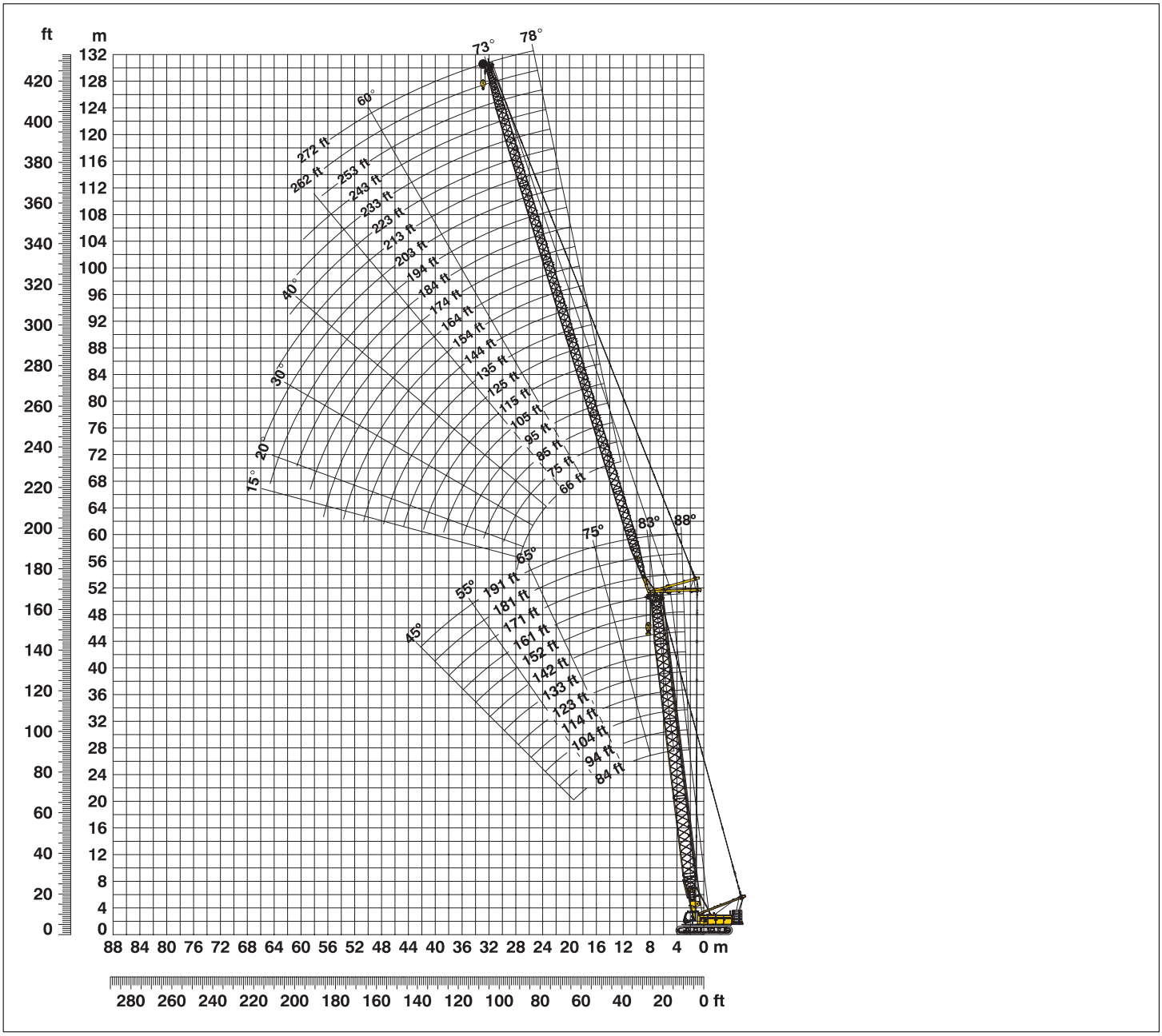

Boom configuration for main boom lengths (84 ft – 191 ft) – see table 1 on page 12

Jib configuration for jib lengths (66 ft – 272 ft)

	Length	Amount of luffing jib extensions																					
Luffing jib foot	23 ft	1	1	1	1	1	1	1	1	1	1	1	1	1	1	1	1	1	1	1	1	1	1
Luffing jib insert	10 ft*		1		1		1		1		1		1		1		1		1		1		1
Luffing jib insert	20 ft*	1	1			1	1			1	1			1	1			1	1			1	1
Luffing jib insert	40 ft*			1		1	1	2	2	2	2	3	3	3	3	4	4	4	4	5	5	5	5
Luffing jib head	23 ft	1	1	1	1	1	1	1	1	1	1	1	1	1	1	1	1	1	1	1	1	1	1
Luffing jib length (ft)		66	75	85	95	105	115	125	135	144	154	164	174	184	194	203	213	223	233	243	253	262	272

*Actual lengths of boom sections are metric (e.g. 3 m, 6 m, 12 m). The figures shown above are approximate conversions to feet.

Lift chart – tower crane (No. 1713.xx)

Main boom angle 88°

Main boom 84 ft

	Jib length in (ft)							
	75	95	115	135	164	184	233	272
Radius (ft)	lbs	lbs	lbs	lbs	lbs	lbs	lbs	lbs
27.8	130.5							
35	121.5	104.9						
40	108.5	102.9	91.4					
45	93.7	92.4	88.2	74.0				
50	84.2	82.4	75.8	72.8	57.0			
55	71.9	71.0	71.6	67.6	56.1	46.0		
65	61.5	59.9	57.7	56.8	50.6	43.8	27.1	
70	55.9	53.7	51.1	49.1	48.6	42.9	24.6	17.8
80	47.2	47.2	44.7	44.2	42.7	40.6	24.4	16.7
100		34.8	34.5	32.8	32.2	30.5	22.6	15.3
120			26.3	26.4	25.9	23.3	20.7	14.1
140				22.0	21.4	20.5	17.8	13.0
165					16.7	15.8	13.7	11.2
185						13.0	11.5	9.4
235							6.2	5.1
270								2.8

Main boom 123 ft

	Jib length in (ft)							
	75	95	115	135	164	184	233	272
Radius (ft)	lbs	lbs	lbs	lbs	lbs	lbs	lbs	lbs
29.1	104.9							
35	101.5	91.4						
40	95.8	87.4	74.8					
45	89.5	82.6	72.1	61.2				
50	82.9	75.7	69.2	59.8	45.6			
55	73.7	71.3	66.1	58.2	45.0	37.8		
65	63.3	61.3	57.9	54.1	43.6	36.8	22.6	
75	52.7	51.2	49.0	47.5	41.9	35.8	22.2	15.3
85	26.6	44.8	42.5	42.3	38.4	34.2	21.6	14.9
100		36.3	35.5	33.4	32.9	30.7	20.6	14.1
120			27.8	27.0	26.3	24.1	19.4	13.2
140				22.7	21.9	20.7	17.3	12.2
170					15.9	15.4	13.4	10.5
190						12.4	11.0	9.3
235							6.5	5.5
275								2.6

Main boom 142 ft

	Jib length in (ft)							
	75	95	115	135	164	184	233	272
Radius (ft)	lbs	lbs	lbs	lbs	lbs	lbs	lbs	lbs
29.8	94.1							
35	90.4	77.5						
40	84.2	75.2	63.8					
45	76.6	71.7	62.5	52.6				
50	73.0	68.0	60.7	51.3	40.1			
55	69.2	64.3	58.7	50.2	39.7	33.6		
65	61.1	57.3	53.6	47.8	38.3	32.8	20.7	
75	53.0	51.0	48.1	44.6	36.9	31.7	20.4	14.2
85	44.9	45.1	42.7	40.8	35.6	30.7	19.9	13.9
100		36.8	35.8	33.8	32.5	29.0	18.9	13.2
120			28.1	27.1	26.2	24.1	17.9	12.4
140				22.8	22.1	20.8	16.3	11.5
170					16.2	15.5	13.3	10.2
190						12.6	11.2	9.3
235							6.7	5.6
275								2.8

Main boom 161 ft

	Jib length in (ft)							
	75	95	115	135	164	184	233	272
Radius (ft)	lbs	lbs	lbs	lbs	lbs	lbs	lbs	lbs
30.5	78.7							
35	76.8	65.5						
40	72.9	64.3	53.0					
45	68.8	62.1	53.0	45.5				
50	64.7	59.6	52.2	44.6	35.3			
55	61.3	56.6	50.6	43.7	35.0	29.9		
65	55.0	50.8	46.6	41.5	33.8	29.2	18.9	
75	49.3	45.9	42.7	39.0	32.4	28.2	18.6	12.9
85	44.2	42.3	39.2	36.5	31.1	27.2	18.1	12.6
100		36.5	34.5	32.7	28.9	24.7	17.2	12.1
120			28.3	27.2	24.6	22.4	16.1	11.4
140				22.5	21.5	19.9	15.0	10.7
170					16.4	15.5	13.2	9.8
190						12.8	11.0	9.2
235							6.7	5.7
275								2.9

Main boom 181 ft

	Jib length in (ft)							
	75	95	115	135	164	184		
Radius (ft)	lbs	lbs	lbs	lbs	lbs	lbs		
31.2	53.0							
40	53.0	53.0	46.3					
45	53.0	52.2	45.5	39.1				
50	53.0	50.8	44.4	38.5	30.8			
55	51.7	48.4	43.2	37.6	30.6	25.5		
60	49.7	45.9	41.7	36.7	30.0	25.5		
70	45.6	41.8	38.1	34.7	28.8	24.5		
80	41.8	38.2	35.3	32.4	27.6	23.4		
85	40.6	36.9	33.8	31.4	27.0	22.9		
100		32.9	30.5	28.4	23.8	21.3		
120			26.1	24.3	21.2	19.2		
140				21.9	19.2	17.2		
160					17.2	15.7		
170					16.1	14.9		
180						13.9		
190						12.7		

Main boom 191 ft

	Jib length in (ft)							
	95	105	115	125	135			
Radius (ft)	lbs	lbs	lbs	lbs	lbs			
35.6	50.3							
40	49.6	46.5	42.7					
45	48.2	45.2	42.1	39.6	36.5			
50	46.7	44.0	41.0	38.6	36.0			
60	42.4	40.7	38.5	36.6	34.3			
70	38.7	37.1	35.2	33.9	32.2			
75	36.9	35.6	33.9	32.4	30.9			
80	35.4	34.0	32.6	31.3	29.6			
85	34.2	32.6	31.3	30.2	28.6			
90	32.8	31.6	30.0	29.1	27.7			
95	31.7	30.6	29.2	27.9	26.8			
100	31.1	29.4	28.3	27.1	25.0			
110		28.2	25.7	24.9	23.9			
120			24.8	23.4	22.6			
130				22.7	21.3			
140					20.6			

Capacities in 1000 lbs with luffing jib (No. 1713.xx) 121,300 lbs counterweight + 33,100 lbs carbody counterweight. Above lift chart is for reference only. For actual lift duty and complete chart with all available configurations please refer to lift chart in operator's cab or manual.

Lift chart – luffing jib (No. 1713.xx)

Main boom angle 83°

Main boom 84 ft

	Jib length in (ft)							
	75	95	115	135	164	184	233	272
Radius (ft)	lbs	lbs	lbs	lbs	lbs	lbs	lbs	lbs
41.6	120.2							
50	94.4	94.0						
55	83.5	83.1	82.0					
60	74.7	74.3	73.9	69.3				
70	61.6	61.3	60.6	58.5	54.0			
75	56.6	56.3	54.3	53.5	51.6	42.9		
90	26.6	44.9	42.7	42.7	41.1	38.7	23.9	
100		39.2	38.0	36.4	35.1	34.0	23.3	15.7
105		36.8	35.7	33.6	33.2	31.6	22.9	15.3
125			28.0	27.0	26.3	23.6	21.0	14.0
145				22.9	21.9	20.9	18.3	13.1
175					16.2	15.6	13.5	11.0
195						12.6	11.2	9.3
240							6.6	5.3
260								4.1
280								2.7

Main boom 123 ft

	Jib length in (ft)							
	75	95	115	135	164	184	233	272
Radius (ft)	lbs	lbs	lbs	lbs	lbs	lbs	lbs	lbs
46.3	98.3							
55	82.1	81.7						
60	73.5	73.1	70.8					
65	66.5	66.1	65.6	59.9				
75	55.6	55.3	54.8	54.3	45.3			
80	51.4	51.0	50.5	50.1	44.9	37.3		
95	41.4	41.2	40.8	40.3	39.6	36.0	21.4	
105		36.4	35.9	35.5	34.8	32.9	21.0	14.1
110		34.3	33.9	33.5	32.8	31.2	20.7	14.0
130			27.3	27.0	26.4	24.3	19.6	13.1
150				22.3	21.7	21.0	17.6	12.2
180					16.2	15.6	13.5	10.6
200						12.6	11.3	9.4
245							6.8	5.4
260								4.4
285								2.7

Main boom 142 ft

	Jib length in (ft)							
	75	95	115	135	164	184	233	272
Radius (ft)	lbs	lbs	lbs	lbs	lbs	lbs	lbs	lbs
48.7	84.8							
55	80.7	70.6						
65	65.8	65.4	60.3					
70	60.0	59.6	58.0	51.0				
75	55.1	54.7	54.1	49.7	39.6			
85	47.2	46.8	46.3	45.8	39.1	33.2		
95	41.0	40.8	40.3	39.8	37.6	32.5	20.8	
110		33.9	33.5	33.1	32.4	30.6	19.3	13.1
115		26.6	31.7	31.2	30.5	29.8	19.1	13.0
130			27.0	26.5	26.0	18.5	18.4	12.5
150				22.0	21.4	16.0	17.0	11.7
180					16.5	12.6	13.8	10.5
200						11.7	11.5	9.6
245							7.0	5.9
260								4.7
285								3.0

Main boom 161 ft

	Jib length in (ft)							
	75	95	115	135	164	184	233	272
Radius (ft)	lbs	lbs	lbs	lbs	lbs	lbs	lbs	lbs
51	71.7							
60	66.5	60.7						
65	63.1	58.1	50.3					
70	59.4	55.6	48.7	43.9				
80	50.3	49.3	45.0	41.7	34.6			
85	46.6	46.3	43.2	40.5	34.3	29.3		
95	40.6	40.3	39.8	38.0	33.0	28.7		
100		37.8	37.3	36.8	32.2	28.3	17.9	
110		33.5	33.1	32.6	30.7	27.2	17.7	12.1
115		31.7	31.3	30.8	29.6	25.7	17.5	12.1
135			25.1	25.1	24.4	20.6	16.6	11.5
155				20.8	20.2	15.6	15.5	10.8
185					15.6	11.6	13.4	9.9
200						10.5	11.6	9.5
250							6.7	5.5
285								3.3

Main boom 181 ft

	Jib length in (ft)							
	75	95	115	135	164	184		
Radius (ft)	lbs	lbs	lbs	lbs	lbs	lbs		
53.4	53.0							
60	53.0	49.9						
65	52.1	48.5	42.6					
75	48.5	44.4	40.4	36.5				
80	46.4	42.6	38.9	35.4	29.5			
85	44.8	41.0	37.4	34.3	29.3	25.3		
90	42.9	39.2	36.1	33.3	28.7	23.3		
100	37.6	36.8	33.6	31.3	27.3	22.4		
120		29.6	29.2	27.7	23.0	20.5		
140			23.9	23.5	20.7	18.6		
150				21.4	19.9	17.7		
160				19.6	19.0	17.0		
170					17.4	16.4		
185					15.3	14.8		
190						14.2		
205						12.6		

Main boom 191 ft

	Jib length in (ft)							
	95	105	115	125	135			
Radius (ft)	lbs	lbs	lbs	lbs	lbs			
60.3	45.4							
65	44.5	41.9						
70	42.6	40.7	38.4	36.0				
75	40.9	39.0	37.0	35.2	33.2			
80	39.1	37.5	35.6	34.0	32.2			
85	37.6	36.0	34.3	32.8	31.1			
90	36.1	34.7	33.0	31.7	30.1			
95	34.8	33.4	32.0	30.6	29.1			
100	33.8	32.2	30.8	29.7	28.2			
110	31.6	30.5	28.9	27.7	25.3			
115	31.0	29.5	28.2	27.0	24.6			
120	29.4	28.7	27.4	25.6	24.0			
130		26.1	25.2	24.2	23.0			
140			23.7	23.0	21.9			
150				21.5	20.9			
160					19.4			

Capacities in 1000 lbs with luffing jib (No. 1713.xx) 121,300 lbs counterweight + 33,100 lbs carbody counterweight. Above lift chart is for reference only. For actual lift duty and complete chart with all available configurations please refer to lift chart in operator's cab or manual.

Lift chart – luffing jib (No. 1713.xx)

Main boom angle 75°

Main boom 84 ft

	Jib length in (ft)							
	75	95	115	135	164	184	233	272
Radius (ft)	lbs	lbs	lbs	lbs	lbs	lbs	lbs	lbs
63.2	66.7							
75	53.9	53.4						
80	49.7	49.3	48.7					
90	43.0	42.6	42.0	41.5				
100	37.6	37.3	36.8	36.4				
105		35.1	34.6	34.2	33.4			
110		33.1	32.7	32.2	31.5	30.9		
120		29.6	29.2	28.8	28.1	27.5		
130			26.4	26.0	25.3	24.7	21.1	
140			23.9	23.5	22.9	22.3	20.7	
150				21.4	20.8	20.3	18.9	12.9
160				19.6	19.0	18.5	17.2	12.7
185					15.4	14.9	13.5	11.3
205						12.6	11.0	9.1
255							6.2	4.7
290								2.8

Main boom 123 ft

	Jib length in (ft)							
	75	95	115	135	164	184	233	272
Radius (ft)	lbs	lbs	lbs	lbs	lbs	lbs	lbs	lbs
46.3	98.3							
55	82.1	81.7						
60	73.5	73.1	70.8					
65	66.5	66.1	65.6	59.9				
75	55.6	55.3	54.8	54.3	45.3			
80	51.4	51.0	50.5	50.1	44.9	37.3		
95	41.4	41.2	40.8	40.3	39.6	36.0	21.4	
105		36.4	35.9	35.5	34.8	32.9	21.0	14.1
110		34.3	33.9	33.5	32.8	31.2	20.7	14.0
130			27.3	27.0	26.4	24.3	19.6	13.1
150				22.3	21.7	21.0	17.6	12.2
180					16.2	15.6	13.5	10.6
200						12.6	11.3	9.4
245							6.8	5.4
260								4.4
285								2.7

Main boom 142 ft

	Jib length in (ft)							
	75	95	115	135	164	184	233	272
Radius (ft)	lbs	lbs	lbs	lbs	lbs	lbs	lbs	lbs
78.2	47.3							
90	39.7	39.2						
95	37.2	36.7	36.0					
105	32.8	32.3	31.7	31.1				
115	26.6	28.8	28.2	27.7				
120		27.3	26.7	26.2	25.4			
125		25.9	25.4	24.9	24.0	23.4		
135		23.4	22.9	22.4	21.6	21.0		
145			20.8	20.4	19.6	19.0	16.7	
150			19.9	19.4	18.7	18.1	16.0	
165				17.0	16.3	15.7	13.8	11.4
170				16.3	15.6	15.0	13.2	11.2
200					12.1	11.6	10.0	8.1
220						9.8	8.5	6.6
265							5.5	4.1
305								2.5

Main boom 161 ft

	Jib length in (ft)							
	75	95	115	135	164	184	233	272
Radius (ft)	lbs	lbs	lbs	lbs	lbs	lbs	lbs	lbs
83	42.6							
95	36.0	35.5						
100	33.8	33.2	32.6					
110	29.9	29.5	28.8	28.2				
120	26.7	26.4	25.8	25.3				
125		25.0	24.5	23.9	23.1			
130		23.8	23.2	22.7	21.9	21.0		
140		21.5	21.0	20.5	19.7	19.1		
150			19.1	18.7	17.9	17.3	14.5	
160			17.5	17.1	16.3	15.7	13.2	
170				15.6	14.9	14.3	11.9	9.9
180				14.3	13.6	13.1	10.9	8.8
205					11.0	10.5	8.6	6.7
225						8.9	7.2	5.3
275							4.6	2.9
295								2.2

Main boom 181 ft

	Jib length in (ft)							
	75	95	115	135	164	184		
Radius (ft)	lbs	lbs	lbs	lbs	lbs	lbs		
88.1	38.1							
100	32.5	31.9						
105	30.6	30.0	29.3					
115	27.2	26.7	26.1	25.5				
125	24.4	24.0	23.4	22.9				
130		22.8	22.2	21.7	20.5			
135		21.7	21.1	20.6	19.6	18.3		
145		19.7	19.2	18.7	17.8	16.6		
160			16.7	16.2	15.5	14.5		
180				13.6	12.9	12.2		
200					10.9	10.3		
210					10.0	9.5		
220						8.7		
230						7.9		

Main boom 191 ft

	Jib length in (ft)							
	95	105	115	125	135			
Radius (ft)	lbs	lbs	lbs	lbs	lbs			
99	31.6							
105	29.4	29.1						
110	27.7	27.4	27.0					
115	26.2	25.9	25.5	25.3				
120	24.8	24.5	24.1	23.9	23.3			
125	23.5	23.3	22.9	22.7	22.3			
130	22.3	22.1	21.7	21.5	21.1			
135	21.2	21.0	20.6	20.5	20.1			
140	20.2	20.0	19.6	19.5	19.1			
145	19.3	19.1	18.7	18.6	18.2			
155		17.4	17.1	16.9	16.5			
165			15.6	15.5	15.1			
175				14.2	13.8			
185					12.7			

Capacities in 1000 lbs with luffing jib (No. 1713.xx) 121,300 lbs counterweight + 33,100 lbs carbody counterweight. Above lift chart is for reference only. For actual lift duty and complete chart with all available configurations please refer to lift chart in operator's cab or manual.

Lift chart – luffing jib (No. 1713.xx)

Main boom angle 65°

Main boom 84 ft

	Jib length in (ft)							
	75	95	115	135	164	184	233	272
Radius (ft)	lbs	lbs	lbs	lbs	lbs	lbs	lbs	lbs
88.4	41.2							
100	35.4	34.9						
110	31.3	30.9						
115		29.2	28.7					
125		26.3	25.8	25.3				
130		25.0	24.5	24.0				
140			22.2	21.7	20.9			
150			20.2	19.8	19.0			
155				18.9	18.2	17.6		
170				16.6	15.9	15.3		
180					14.6	14.0	12.6	
200					12.3	11.8	10.5	
205						11.4	10.0	8.9
215						10.5	9.1	8.0
265							5.7	4.7
305								2.7

Main boom 123 ft

	Jib length in (ft)							
	75	95	115	135	164	184	233	272
Radius (ft)	lbs	lbs	lbs	lbs	lbs	lbs	lbs	lbs
104.6	30.4							
120	25.6	25.1						
130	23.0	22.6	22.0					
140		20.5	19.9	19.3				
150		18.6	18.1	17.6				
160			16.5	16.0	15.2			
170			15.1	14.7	13.9	13.2		
190				12.3	11.6	11.0		
195					11.1	10.6	8.8	
215					9.4	8.9	7.3	
220						8.5	6.9	5.0
235						7.4	6.0	4.2
240							5.7	3.9
260							4.6	2.9
280							3.7	2.1
285							3.4	

Main boom 142 ft

	Jib length in (ft)							
	75	95	115	135	164	184	233	272
Radius (ft)	lbs	lbs	lbs	lbs	lbs	lbs	lbs	lbs
112.9	26.0							
125	22.8	22.3						
140	19.6	19.2	18.5					
150		17.4	16.8	16.3				
160		15.9	15.4	14.8				
165			14.7	14.1	13.3			
175			13.4	12.9	12.1	11.4		
180			12.8	12.4	11.6	10.9		
195				10.9	10.1	9.5		
205					9.3	8.7	6.5	
225					7.8	7.2	5.2	
230						6.9	4.9	3.0
245						6.0	4.2	2.3
250							3.9	2.1
290							2.4	

Main boom 161 ft

	Jib length in (ft)						
	75	95	115	135	164	184	233
Radius (ft)	lbs	lbs	lbs	lbs	lbs	lbs	lbs
120.8	22.3						
135	19.3	18.8					
145	17.5	17.0	16.3				
155		15.5	14.8	14.2			
165		14.1	13.5	13.0			
175			12.4	11.8	11.0		
185			11.3	10.8	10.0	9.1	
205				9.1	8.3	7.6	
215					7.6	6.9	4.4
220					7.3	6.6	4.1
230					6.6	6.0	3.6
240						5.5	3.1
250						4.9	2.7
260							2.3
265							2.1

Main boom 181 ft

	Jib length in (ft)							
	75	95	115	135	164	184		
Radius (ft)	lbs	lbs	lbs	lbs	lbs	lbs		
129.2	18.8							
145	16.1	15.5						
155	14.6	14.1	13.4					
165		12.9	12.2	11.6				
175		11.8	11.2	10.6				
180			10.7	10.1	8.8			
195			9.3	8.8	7.7	6.6		
200				8.4	7.3	6.3		
205				8.1	7.0	6.0		
210				7.7	6.7	5.7		
220					6.2	5.1		
230					5.7	4.6		
240					5.1	4.2		
250						3.8		
260						3.5		

Main boom 191 ft

	Jib length in (ft)							
	95	105	115	125	135			
Radius (ft)	lbs	lbs	lbs	lbs	lbs			
144.6	14.8							
150	14.0							
155	13.4	13.1						
160	12.8	12.5	12.1					
165	12.2	12.0	11.5	11.3				
170	11.7	11.4	11.0	10.8	10.2			
175	11.1	10.9	10.5	10.3	9.8			
180	10.6	10.4	10.0	9.9	9.3			
185		10.0	9.6	9.4	9.0			
190		9.5	9.2	9.0	8.6			
195			8.7	8.6	8.2			
200			8.3	8.2	7.8			
205				7.9	7.5			
210					7.1			
215					6.8			

Capacities in 1000 lbs with luffing jib (No. 1713.xx) 121,300 lbs counterweight + 33,100 lbs carbody counterweight. Above lift chart is for reference only. For actual lift duty and complete chart with all available configurations please refer to lift chart in operator's cab or manual.

Lift chart – luffing jib (No. 1713.xx)

Main boom angle 45°

Main boom 84 ft

	Jib length in (ft)						
	75	95	115	135	164	184	233
Radius (ft)	lbs	lbs	lbs	lbs	lbs	lbs	lbs
130.5	22.2						
140	20.2						
150		18.0					
160		16.4					
165			15.2				
175			13.9				
180				12.8			
195				11.3			
205					9.7		
220					8.5	7.9	
225					8.1	7.6	
245						6.3	
260							4.1
270							3.6
280							3.2
290							2.8

Main boom 123 ft

	Jib length in (ft)					
	75	95	115	135	164	184
Radius (ft)	lbs	lbs	lbs	lbs	lbs	lbs
157.7	13.9					
165	13.0					
175		11.5				
185		10.5				
190			9.4			
200			8.6			
205			8.2			
210				7.4		
215				7.0		
220				6.7		
235					5.1	
240					4.8	
250					4.3	3.7
255						3.5
260						3.3
270						2.9

Main boom 142 ft

	Jib length in (ft)				
	75	95	115	135	164
Radius (ft)	lbs	lbs	lbs	lbs	lbs
171.6	10.5				
180	9.8				
190		8.4			
200		7.7			
205			6.7		
215			6.1		
220				5.2	
235				4.5	
245					3.2
265					2.4

Main boom 161 ft

	Jib length in (ft)			
	75	95	115	135
Radius (ft)	lbs	lbs	lbs	lbs
184.8	7.7			
185	7.7			
190	7.4			
201		6.1		
210		5.6		
220			4.4	
230			3.9	
235				3.1
240				2.9
250				2.5

Capacities in 1000 lbs with luffing jib (No. 1713.xx) 121,300 lbs counterweight + 33,100 lbs carbody counterweight. Above lift chart is for reference only. For actual lift duty and complete chart with all available configurations please refer to lift chart in operator's cab or manual.

Working range – fixed jib (No. 0806.xx) 15° and 30°

Main boom 88°– 30°

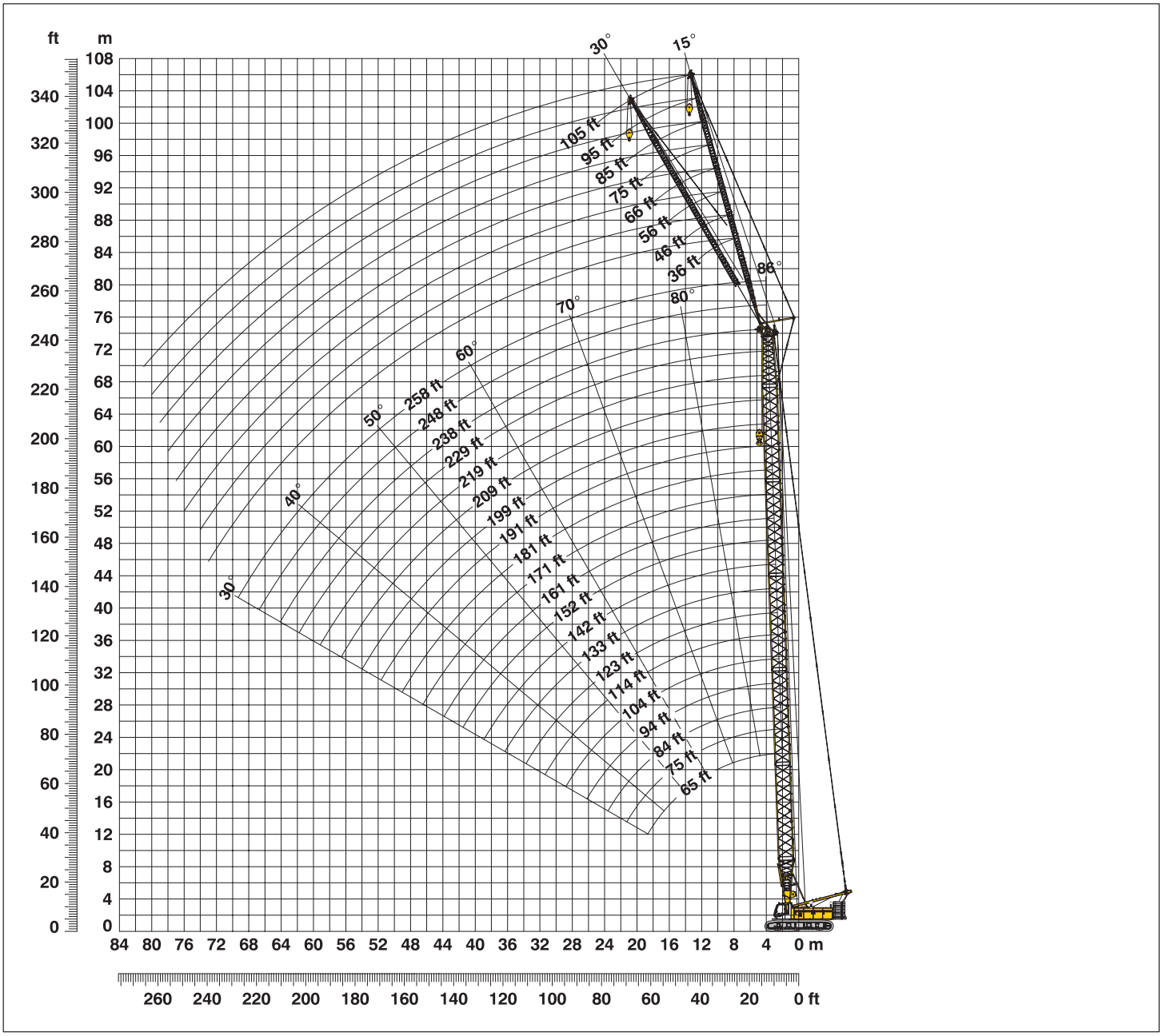

Boom configuration for boom lengths (66 ft – 258 ft) – see table 1 on page 12

Fixed jib configuration for fixed jib lengths (36 ft – 105 ft)

	Length	Amount of fixed jib extensions							
Fixed jib foot	18 ft	1	1	1	1	1	1	1	1
Fixed jib insert	10 ft*		1		1		1		1
Fixed jib insert	20 ft*			1	1	2	2	3	3
Fixed jib head	18 ft	1	1	1	1	1	1	1	1
Fixed jib length (ft)		36	46	56	66	75	85	95	105

*Actual lengths of boom sections are metric (e.g. 3 m, 6 m). The figures shown above are approximate conversions to feet.

Lift chart – fixed jib (No. 0806.xx)

Offset 15°

Main boom 66 ft

	Fixed jib length in (ft)			
	36	66	85	105
Radius (ft)	lbs	lbs	lbs	lbs
18.3	53.0			
35	53.0	37.7		
40	53.0	36.5	23.0	
50	53.0	34.4	20.3	12.5
60	53.0	32.2	19.1	11.8
70	49.8	29.7	17.9	11.3
80	44.2	27.1	16.6	10.7
90	40.3	24.8	15.9	10.3
95	38.4	24.0	15.7	10.1
125		19.6	14.0	9.2
145			13.5	8.8
165				8.8

Main boom 94 ft

	Fixed jib length in (ft)			
	36	66	85	105
Radius (ft)	lbs	lbs	lbs	lbs
19.2	53.0			
35	53.0	38.2		
40	53.0	37.3	23.4	
50	53.0	35.6	20.9	12.4
60	53.0	34.0	20.0	11.9
80	50.3	30.2	17.9	10.9
100	37.4	25.6	16.2	10.1
120	29.1	23.1	15.1	9.5
150		19.9	14.0	8.9
170			13.6	8.6
180				8.6
190				8.6

Main boom 133 ft

	Fixed jib length in (ft)			
	36	66	85	105
Radius (ft)	lbs	lbs	lbs	lbs
20.6	53.0			
35	53.0	37.3		
45	53.0	36.0	20.8	
50	53.0	35.4	20.5	13.0
80	49.3	31.7	18.1	11.1
100	36.4	28.8	16.8	10.4
120	28.1	25.2	15.8	9.8
140	22.4	23.2	14.8	9.4
155	19.1	20.2	14.4	9.0
185		15.1	13.6	8.6
205			13.1	8.5
225				8.5

Main boom 171 ft

	Fixed jib length in (ft)			
	36	66	85	105
Radius (ft)	lbs	lbs	lbs	lbs
21.9	53.0			
35	53.0	35.7		
45	53.0	34.9	19.6	
55	53.0	33.9	19.4	12.0
80	48.3	31.6	18.0	11.1
120	27.0	27.7	16.0	10.0
140	21.3	22.5	15.2	9.5
160	17.0	18.2	14.5	9.2
190	12.3	13.4	13.6	8.7
215		10.4	11.0	8.4
235			9.0	8.2
255				7.8

Main boom 191 ft

	Fixed jib length in (ft)			
	36	66	85	105
Radius (ft)	lbs	lbs	lbs	lbs
22.6	53.0			
35	53.0	34.7		
45	53.0	34.1	19.5	
55	53.0	33.2	19.2	11.9
80	47.7	31.1	17.9	11.1
120	26.5	27.8	16.0	10.0
160	16.4	17.6	14.6	9.2
200	10.5	11.5	12.1	8.7
205	9.9	10.9	11.5	8.6
235		7.9	8.4	8.3
255			6.8	7.3
275				5.8

Main boom 219 ft

	Fixed jib length in (ft)			
	36	66	85	105
Radius (ft)	lbs	lbs	lbs	lbs
23.6	53.0			
40	53.0	31.8		
45	53.0	31.7	20.3	
55	52.4	31.1	18.5	11.8
80	47.0	29.3	17.2	11.1
120	25.7	26.9	15.6	10.1
160	15.6	16.8	14.5	9.3
200	9.7	10.7	11.3	8.7
230	6.6	7.6	8.1	8.1
260		5.1	5.6	6.1
280			4.2	4.7
295				3.8

Main boom 238 ft

	Fixed jib length in (ft)			
	36	66	85	105
Radius (ft)	lbs	lbs	lbs	lbs
24.3	53.0			
40	51.7	30.5		
45	50.9	30.3	19.9	
55	49.4	29.7	18.1	11.4
80	45.4	28.0	16.8	10.7
120	25.1	23.1	15.4	9.8
160	15.0	16.3	14.3	9.1
200	9.1	10.2	10.8	8.5
245	4.8	5.7	6.3	6.8
275		3.5	4.1	4.5
295			2.8	3.3
310				2.4

Main boom 248 ft

	Fixed jib length in (ft)			
	36	66	85	95
Radius (ft)	lbs	lbs	lbs	lbs
24.6	50.6			
40	48.9	30.0		
45	48.1	29.8		
50	47.3	29.5	18.1	15.6
80	42.4	27.3	16.6	13.5
120	24.8	22.9	15.2	12.5
160	14.7	16.0	14.2	11.6
200	8.8	9.9	10.5	10.8
255	3.7	4.6	5.2	5.4
285		2.6	3.1	3.4
300			2.2	2.5
305				2.2

Main boom 258 ft

	Fixed jib length in (ft)			
	36	46	56	66
Radius (ft)	lbs	lbs	lbs	lbs
25	48.4			
30	48.1	40.6		
35	47.4	40.3	34.3	
40	46.7	39.8	34.0	28.4
80	39.8	34.6	30.1	24.2
120	24.5	25.1	25.7	22.1
160	14.4	14.8	15.3	15.7
200	8.4	8.8	9.2	9.6
240	4.5	4.9	5.2	5.5
265	2.7	3.0	3.3	3.6
275		2.3	2.6	2.9
285			2.0	2.3

Capacities in 1000 lbs with luffing jib (No. 0806.xx) 121,300 lbs counterweight + 33,100 lbs carbody counterweight. Above lift chart is for reference only. For actual lift duty and complete chart with all available configurations please refer to lift chart in operator's cab or manual.

Lift chart – fixed jib (No. 0806.xx)

Offset 30°

Main boom 66 ft

	Fixed jib length in (ft)			
	36	66	85	105
Radius (ft)	lbs	lbs	lbs	lbs
27	53.0			
50	50.3	29.7		
60	45.9	27.0	16.6	
75	39.8	23.7	15.5	10.0
80	38.3	22.7	15.2	9.8
90	35.7	21.3	14.6	9.5
100	26.6	20.0	14.1	9.3
130		18.2	13.2	8.7
140			13.0	8.6
145			13.0	8.6
150				8.6
165				8.6

Main boom 94 ft

	Fixed jib length in (ft)			
	36	66	85	105
Radius (ft)	lbs	lbs	lbs	lbs
28	53.0			
50	53.0	30.8		
60	49.5	28.4	18.5	
75	44.3	25.2	15.7	10.0
80	42.5	24.5	15.5	9.8
90	39.8	23.0	15.0	9.6
100	37.6	21.9	14.6	9.3
110	33.1	20.7	14.2	9.1
120	29.2	20.0	13.9	9.0
150		18.5	13.2	8.6
170			13.1	8.6
190				8.6

Main boom 133 ft

	Fixed jib length in (ft)			
	36	66	85	105
Radius (ft)	lbs	lbs	lbs	lbs
29.4	53.0			
50	53.0	30.7		
65	51.2	28.1	16.4	
75	48.2	25.7	15.9	9.9
80	46.8	25.2	15.6	9.8
100	36.9	23.1	14.7	9.4
120	28.5	21.3	14.0	9.0
140	22.7	19.8	13.5	8.8
155	19.2	19.1	13.2	8.6
185		15.2	12.9	8.5
205			12.9	8.4
225				8.0

Main boom 171 ft

	Fixed jib length in (ft)			
	36	66	85	105
Radius (ft)	lbs	lbs	lbs	lbs
30.7	53.0			
50	53.0	29.8		
65	52.3	28.5	16.1	
75	50.6	27.2	15.7	10.3
100	36.0	23.7	14.8	8.3
140	21.7	20.9	13.6	8.3
160	17.3	18.7	13.3	8.3
180	13.9	15.2	13.0	8.3
190	12.5	13.7	12.9	8.3
215		10.5	11.3	8.3
235			9.1	8.3
255				7.9

Main boom 191 ft

	Fixed jib length in (ft)			
	36	66	85	105
Radius (ft)	lbs	lbs	lbs	lbs
31.4	53.0			
55	52.3	29.1		
65	51.3	28.4	16.0	
80	48.9	26.8	15.4	9.4
100	35.5	23.3	14.8	8.5
140	21.2	21.4	13.7	8.5
180	13.4	14.7	13.0	8.3
200	10.6	11.9	12.7	8.2
205	10.0	11.3	12.0	8.2
235		8.0	8.7	8.2
255			6.9	7.6
275				5.9

Main boom 219 ft

	Fixed jib length in (ft)			
	36	66	85	105
Radius (ft)	lbs	lbs	lbs	lbs
32.4	50.6			
55	49.2	27.3		
65	48.3	26.7	16.9	
80	46.8	23.2	14.9	9.4
100	34.8	22.4	14.4	9.2
140	20.4	21.0	13.5	8.7
180	12.6	14.0	12.9	8.3
220	7.7	8.9	9.6	8.1
230	6.7	7.9	8.6	8.1
260		5.2	5.9	6.5
280			4.3	5.0
300				3.6

Main boom 238 ft

	Fixed jib length in (ft)			
	36	66	85	105
Radius (ft)	lbs	lbs	lbs	lbs
33	47.5			
55	46.2	23.7		
60	45.7	23.5		
65	45.2	23.3	16.2	
80	43.6	22.5	14.7	9.3
140	19.9	20.5	13.4	8.6
180	12.1	13.6	12.7	8.3
220	7.2	8.4	9.2	8.0
245	4.9	6.0	6.7	7.4
275		3.6	4.3	4.9
295			2.9	3.5
315				2.2

Main boom 248 ft

	Fixed jib length in (ft)			
	36	66	85	95
Radius (ft)	lbs	lbs	lbs	lbs
33.4	44.9			
55	42.9	23.7		
65	41.5	23.4	16.0	
75	40.2	22.9	14.7	12.1
100	34.1	21.9	14.1	11.7
140	19.6	20.5	13.4	11.1
180	11.8	13.3	12.8	10.8
220	6.9	8.1	8.9	9.3
255	3.8	4.9	5.6	6.0
285		2.7	3.3	3.7
300			2.3	2.7
310				2.0

Main boom 258 ft

	Fixed jib length in (ft)			
	36	46	56	66
Radius (ft)	lbs	lbs	lbs	lbs
33.7	42.8			
45	41.9	35.8		
50	41.1	35.4	30.3	
55	40.3	34.9	30.1	23.0
100	33.7	30.4	27.4	21.2
180	11.5	12.0	12.6	13.0
220	6.6	7.0	7.5	7.9
260	3.1	3.5	3.9	4.2
265	2.8	3.1	3.5	3.9
275		2.4	2.8	3.1
285			2.1	2.4
290				2.1

Capacities in 1000 lbs with luffing jib (No. 0806.xx) 121,300 lbs counterweight + 33,100 lbs carbody counterweight. Above lift chart is for reference only. For actual lift duty and complete chart with all available configurations please refer to lift chart in operator's cab or manual.

Working range – fixed jib (No. 1008.xx) 15° and 30°

Main boom 88°– 30°

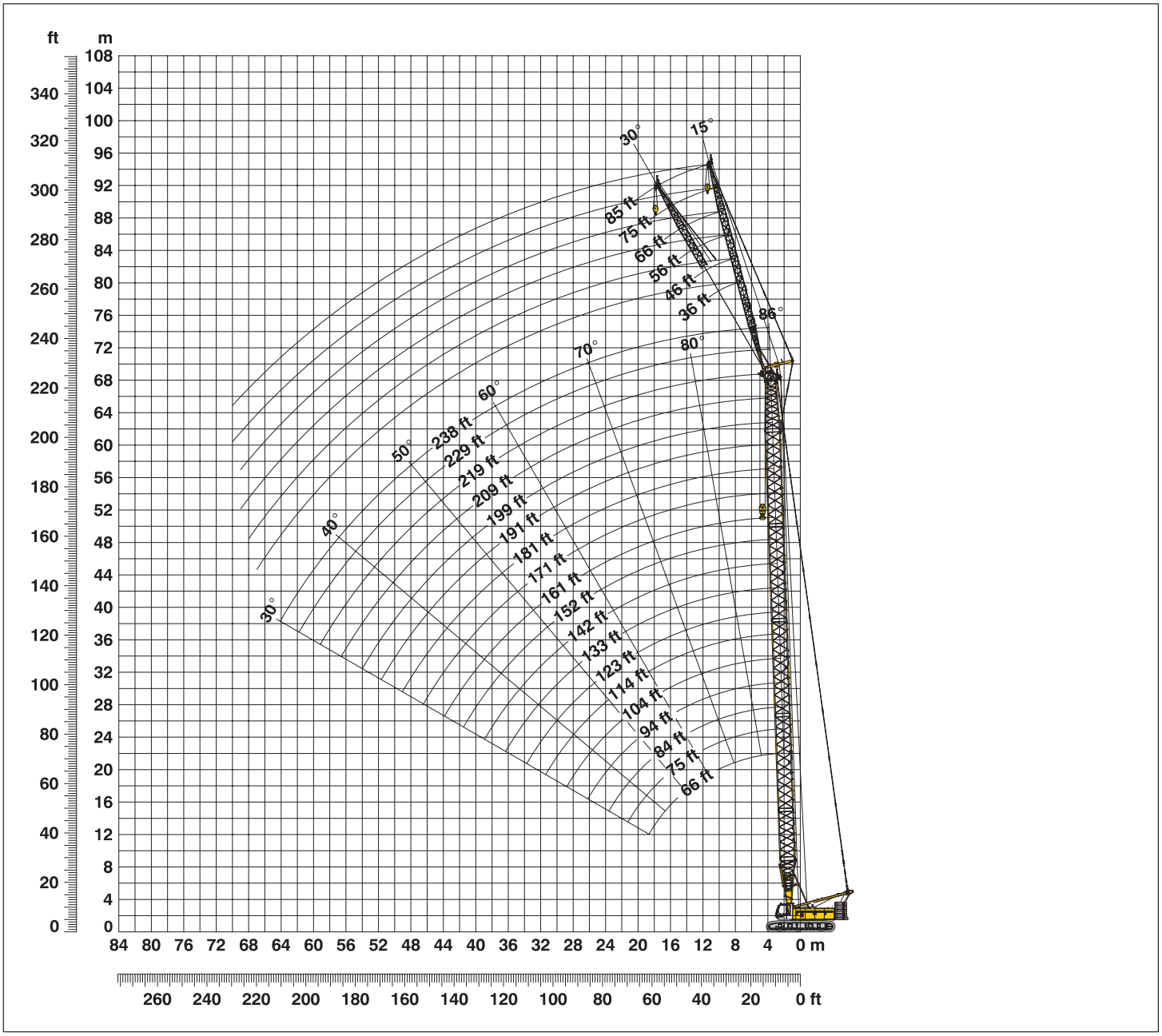

Boom configuration for boom lengths (66 ft – 238 ft) – see table 1 on page 12

Fixed jib configuration for fixed jib lengths (36 ft – 85 ft)

	Length	Amount of fixed jib extensions					
Fixed jib foot	18 ft	1	1	1	1	1	1
Fixed jib insert	10 ft*		1		1		1
Fixed jib insert	20 ft*			1	1	2	2
Fixed jib head	18 ft	1	1	1	1	1	1
Fixed jib length (ft)		36	46	56	66	75	85

*Actual lengths of boom sections are metric (e.g. 3 m, 6 m). The figures shown above are approximate conversions to feet.

Lift chart – fixed jib (No. 1008.xx)

Offset 15°

Main boom 66 ft

	Fixed jib length in (ft)			
	36	46	66	85
Radius (ft)	lbs	lbs	lbs	lbs
17.9	79.1			
25	79.1	79.1		
30	79.1	79.0	59.3	
40	78.5	69.5	51.6	42.0
60	72.1	56.8	40.9	33.2
70	58.7	55.8	37.4	30.0
80	49.0	49.6	37.0	27.0
90	41.7	42.3	35.8	26.7
95	38.7	39.3	34.4	26.6
105		34.1	31.4	26.3
125			27.3	22.9
145				20.3

Main boom 94 ft

	Fixed jib length in (ft)			
	36	46	66	85
Radius (ft)	lbs	lbs	lbs	lbs
18.9	79.1			
25	79.1	77.8		
35	79.1	74.4	62.4	
40	79.1	73.0	59.9	44.7
60	71.4	66.8	50.8	38.6
80	48.3	48.8	42.4	32.5
100	35.4	35.8	36.6	28.2
110	30.8	31.3	32.0	26.7
120	27.0	27.5	28.2	26.2
130		24.4	25.1	24.9
150			20.0	20.6
170				16.6

Main boom 133 ft

	Fixed jib length in (ft)			
	36	46	66	85
Radius (ft)	lbs	lbs	lbs	lbs
20.2	79.1			
25	79.1	79.1		
35	79.1	78.0	68.0	
40	79.1	76.7	66.9	46.1
80	47.3	47.8	48.5	37.5
100	34.3	34.8	35.6	32.3
120	26.1	26.5	27.1	27.7
140	20.3	20.7	21.3	21.8
155	17.0	17.3	17.9	18.4
165		15.4	16.0	16.5
185			12.8	13.3
205				10.6

Main boom 152 ft

	Fixed jib length in (ft)			
	36	46	66	85
Radius (ft)	lbs	lbs	lbs	lbs
20.9	79.1			
25	79.1	79.1		
35	79.1	77.8	65.8	
45	79.1	74.5	62.9	44.2
80	46.7	47.3	48.3	37.9
120	25.5	25.9	26.6	27.2
140	19.7	20.1	20.7	21.3
160	15.4	15.7	16.3	16.8
170	13.6	13.9	14.5	15.0
180		12.3	12.9	13.4
200			10.2	10.7
220				8.4

Main boom 171 ft

	Fixed jib length in (ft)			
	36	46	66	85
Radius (ft)	lbs	lbs	lbs	lbs
21.6	79.1			
30	79.1	75.7		
35	79.1	75.4	60.9	
45	79.1	73.1	59.7	42.6
60	69.6	69.2	54.9	40.7
100	33.2	33.7	34.6	33.9
140	19.2	19.5	20.2	20.8
180	11.6	11.9	12.4	12.9
190	10.2	10.4	11.0	11.4
200		9.2	9.7	10.1
215			8.0	8.4
235				6.4

Main boom 191 ft

	Fixed jib length in (ft)			
	36	46	66	85
Radius (ft)	lbs	lbs	lbs	lbs
22.3	79.1			
30	79.1	72.4		
35	78.8	72.1	55.9	
45	78.1	70.1	55.7	40.4
80	45.7	46.3	45.9	36.4
120	24.4	24.8	25.6	26.3
160	14.3	14.6	15.2	15.7
200	8.3	8.5	9.1	9.5
205	7.7	8.0	8.5	8.9
215		6.9	7.4	7.8
235			5.4	5.8
255				4.1

Main boom 219 ft

	Fixed jib length in (ft)			
	36	46	66	85
Radius (ft)	lbs	lbs	lbs	lbs
23.3	67.5			
30	67.0	59.8		
35	66.2	59.5	46.0	
45	63.9	58.1	46.0	36.3
80	44.9	45.5	41.0	33.5
120	23.5	24.0	24.8	23.8
160	13.4	13.7	14.4	14.9
200	7.5	7.7	8.2	8.7
225	4.8	5.0	5.5	5.9
235		4.1	4.6	5.0
255			2.9	3.3
270				2.2

Main boom 229 ft

	Fixed jib length in (ft)			
	36	46	56	66
Radius (ft)	lbs	lbs	lbs	lbs
23.6	62.1			
30	61.5	54.7		
35	60.7	54.3	47.2	
40	59.4	53.7	47.2	42.3
80	44.6	45.2	42.0	38.5
120	23.2	23.6	24.1	24.5
160	13.0	13.4	13.7	14.0
200	7.1	7.4	7.7	7.9
235	3.6	3.8	4.1	4.3
245		2.9	3.2	3.4
255			2.4	2.6
260				2.2

Main boom 238 ft

	Fixed jib length in (ft)			
	36	46		
Radius (ft)	lbs	lbs		
23.9	53.0			
30	53.0	50.3		
40	53.0	50.1		
80	44.4	41.9		
120	23.0	23.4		
160	12.8	13.1		
180	9.5	9.8		
200	6.9	7.1		
220	4.7	4.9		
240	2.9	3.1		
245	2.5	2.7		
250		2.3		

Capacities in 1000 lbs with luffing jib (No. 1008.xx) 121,300 lbs counterweight + 33,100 lbs carbody counterweight. Above lift chart is for reference only. For actual lift duty and complete chart with all available configurations please refer to lift chart in operator's cab or manual.

Lift chart – fixed jib (No. 1008.xx)

Offset 30°

Main boom 66 ft

	Fixed jib length in (ft)			
	36	46	66	85
Radius (ft)	lbs	lbs	lbs	lbs
26.7	70.2			
35	64.4	52.2		
45	58.5	47.6	34.9	
60	53.1	41.9	30.8	25.4
70	53.0	40.4	28.6	23.5
80	49.5	39.7	26.6	21.9
90	42.1	37.2	26.6	20.5
95	39.0	35.8	26.6	19.8
100	26.6	35.1	26.4	19.4
110		26.6	25.0	18.9
130			23.0	17.3
150				16.1

Main boom 94 ft

	Fixed jib length in (ft)			
	36	46	66	85
Radius (ft)	lbs	lbs	lbs	lbs
27.7	74.3			
35	71.6	59.4		
50	64.6	54.0	37.4	
60	59.9	51.2	34.8	26.6
80	49.0	45.0	30.4	24.1
90	41.6	42.3	28.5	22.6
100	35.8	36.4	27.4	21.3
110	31.1	31.7	26.6	20.2
120	27.2	27.8	26.0	19.3
130		24.6	25.2	18.5
150			20.2	17.0
170				16.3

Main boom 133 ft

	Fixed jib length in (ft)			
	36	46	66	85
Radius (ft)	lbs	lbs	lbs	lbs
29	79.1			
40	78.4	64.7		
50	74.4	61.2	41.8	
60	68.3	56.9	38.7	28.7
80	48.2	49.0	33.7	26.5
100	35.0	35.6	30.1	23.6
120	26.6	27.0	27.4	21.1
140	20.6	21.0	22.0	19.3
155	17.1	17.5	18.4	18.1
165		15.5	16.4	17.1
185			12.9	13.6
205				10.8

Main boom 152 ft

	Fixed jib length in (ft)			
	36	46	66	85
Radius (ft)	lbs	lbs	lbs	lbs
29.7	79.1			
40	78.2	64.5		
50	74.5	61.3	41.9	
65	64.0	55.5	37.7	27.9
100	34.4	35.1	31.0	24.0
120	26.0	26.6	27.5	21.8
140	20.1	20.5	21.5	20.0
160	15.6	16.0	16.9	17.6
170	13.8	14.2	15.0	15.7
180		12.5	13.3	14.0
200			10.3	11.0
220				8.5

Main boom 171 ft

	Fixed jib length in (ft)			
	36	46	66	85
Radius (ft)	lbs	lbs	lbs	lbs
30.3	78.4			
40	77.6	63.2		
50	72.1	60.3	41.4	
65	63.7	55.0	38.0	27.9
100	34.0	34.7	31.7	23.3
140	19.6	20.1	21.0	20.5
160	15.2	15.6	16.4	17.2
180	11.7	12.1	12.9	13.6
190	10.3	10.6	11.4	12.0
200		9.3	10.0	10.6
215			8.1	8.8
235				6.6

Main boom 291 ft

	Fixed jib length in (ft)			
	36	46	66	85
Radius (ft)	lbs	lbs	lbs	lbs
31	73.9			
40	72.6	60.8		
50	68.3	58.0	41.0	
65	63.0	53.3	38.2	27.9
100	33.5	34.2	32.1	21.5
140	19.1	19.6	20.6	20.8
180	11.2	11.6	12.4	13.1
200	8.4	8.8	9.5	10.1
205	7.8	8.1	8.9	9.5
215		7.0	7.7	8.3
235			5.5	6.1
255				4.2

Main boom 219 ft

	Fixed jib length in (ft)			
	36	46	66	85
Radius (ft)	lbs	lbs	lbs	lbs
32	61.9			
40	61.1	53.5		
55	57.7	50.2	38.1	
65	55.2	48.1	36.8	27.2
100	32.8	33.6	31.6	18.9
140	18.3	18.8	19.9	18.8
180	10.4	10.8	11.6	12.4
220	5.4	5.7	6.4	7.0
230	4.5	4.7	5.4	6.0
240		3.8	4.4	5.0
260			2.7	3.2
275				2.0

Main boom 229 ft

	Fixed jib length in (ft)			
	36	46	56	66
Radius (ft)	lbs	lbs	lbs	lbs
32.4	56.3			
40	56.3	47.7		
45	56.1	47.5	40.7	
55	53.8	46.4	40.7	36.2
100	32.5	33.3	34.2	31.2
140	18.0	18.5	19.1	19.6
180	10.1	10.5	11.0	11.4
220	5.1	5.4	5.8	6.1
240	3.2	3.5	3.9	4.1
250		2.6	3.0	3.2
260			2.2	2.4
265				2.0

Main boom 238 ft

	Fixed jib length in (ft)			
	36	46		
Radius (ft)	lbs	lbs		
32.7	51.9			
40	51.6	44.7		
60	47.9	43.0		
100	32.3	33.1		
140	17.8	18.3		
160	13.3	13.8		
180	9.9	10.3		
200	7.2	7.5		
220	4.9	5.2		
240	3.0	3.3		
245	2.6	2.9		
255		2.1		

Capacities in 1000 lbs with luffing jib (No. 1008.xx) 121,300 lbs counterweight + 33,100 lbs carbody counterweight. Above lift chart is for reference only. For actual lift duty and complete chart with all available configurations please refer to lift chart in operator's cab or manual.

Notice

Notice

LR 1160 – 102 23 038 – 02/2005 Subject to change without notice.

Liebherr–Werk Nenzing GmbH
P.O. Box 10, A–6710 Nenzing/Austria
Tel.: +43 5525 606 – 473
Fax: +43 5525 606 – 499
crawler.crane@lwn.liebherr.com
www.liebherr.com